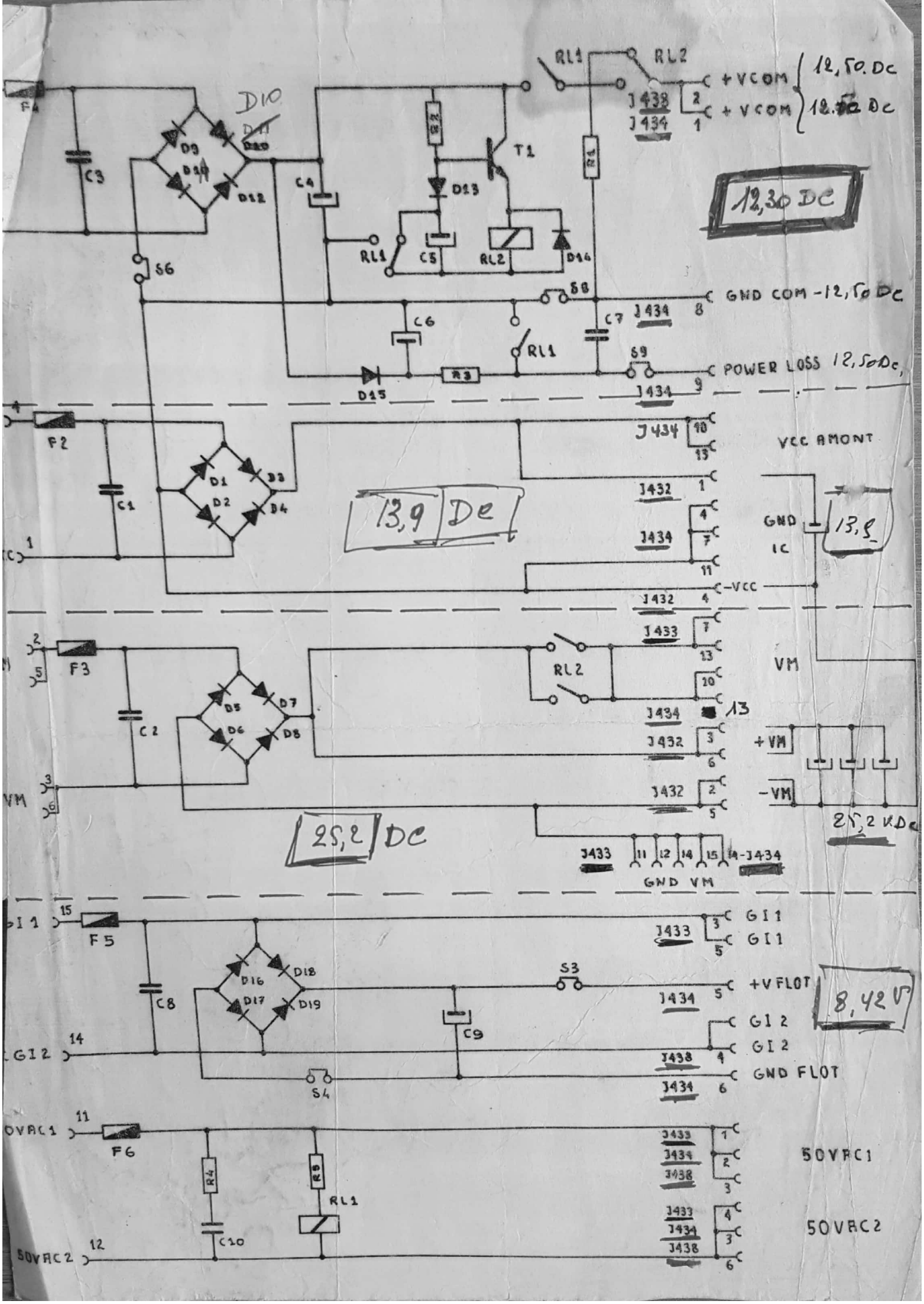

Scanned by CamScanner

PRINTED CIRCUITS INTERCONNECTION DIAGRAM

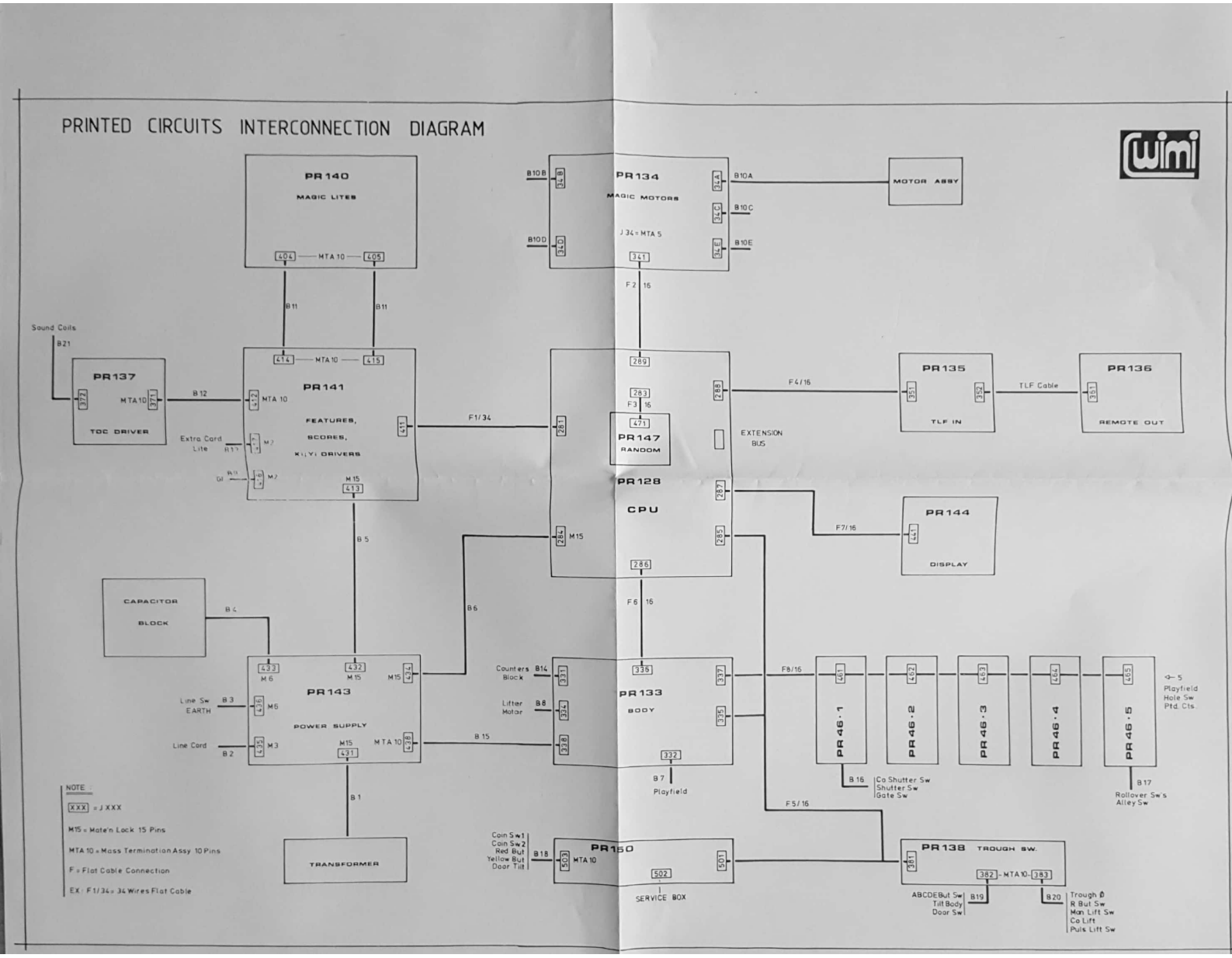

Scanned by CamScanner

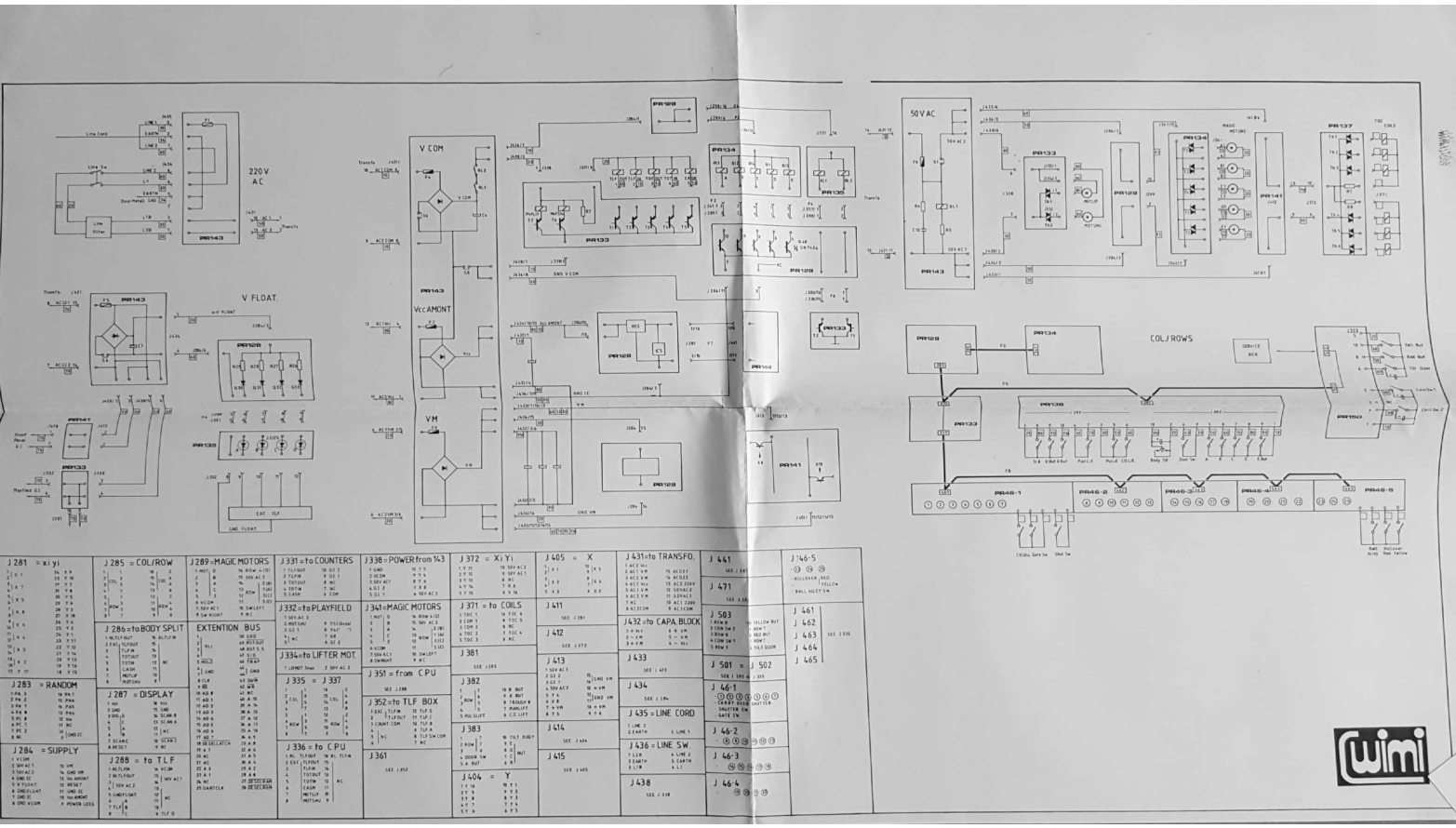

Scanned by CamScanner

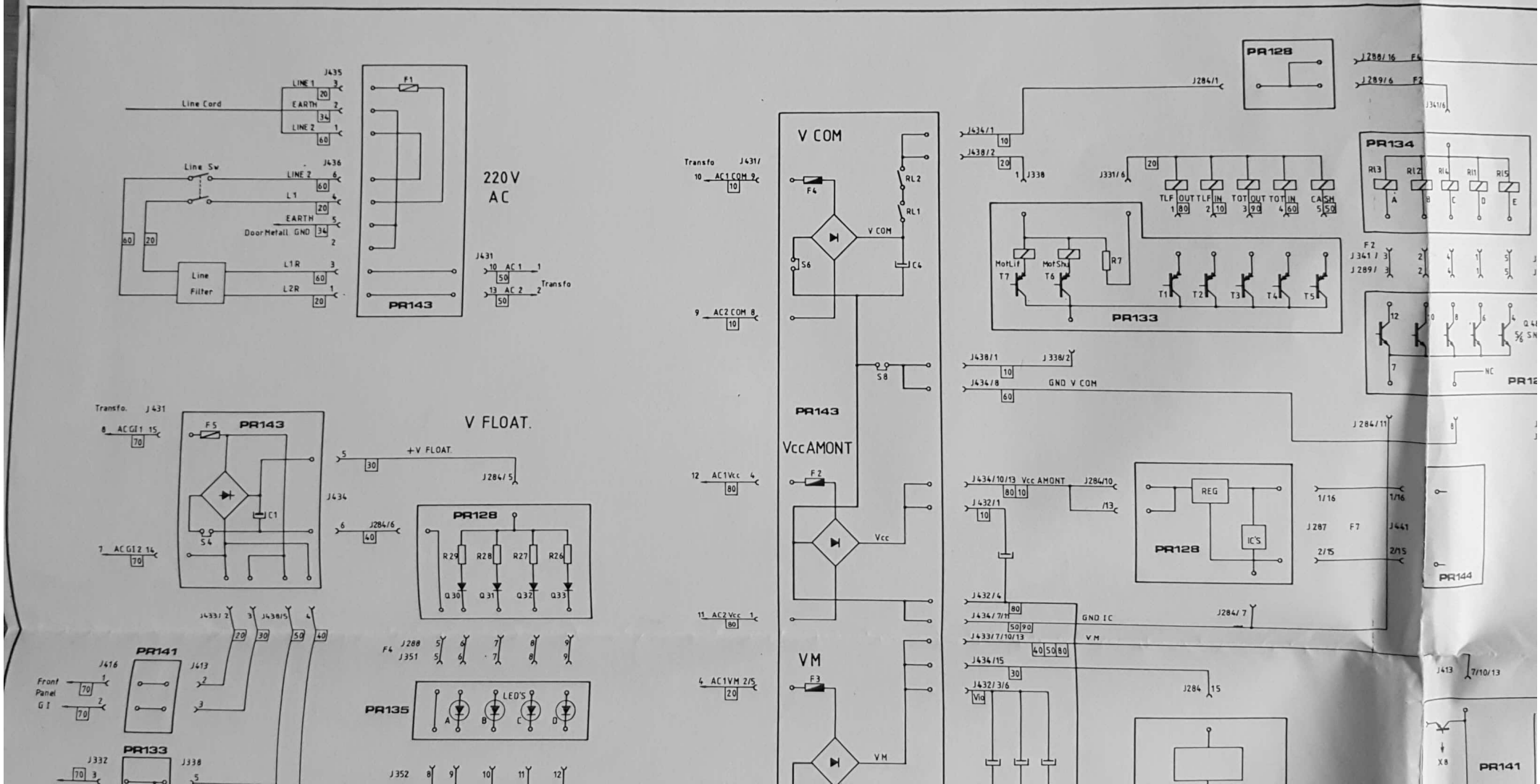

Scanned by CamScanner

J 281 = xi yi

1	X 1	34	Y 9
2		33	Y 10
3	X 7	32	Y 7
4		31	Y 8
5	X 5	30	Y 5
6		29	Y 6
7	X 8	28	Y 3
8		27	Y 18
9	X 6	26	Y 4
10		25	Y 2
11	X 4	24	Y 1
12		23	Y 11
13	X 3	22	Y 12
14		21	Y 14
15	X 2	20	Y 13
16		19	Y 16
17	Y 17	18	Y 15

J 283 = RANDOM

1	PA 3	16	PA 7
2	PA 2	15	PA6
3	PA 1	14	PA5
4	PA 0	13	PA4
5	PC 0	12	Vcc
6	PC 1	11	NC
7	PC 2	10	GND IC
8	NC	9	GND IC

J 284 = SUPPLY

1	VCOM		
2	50V AC 1	15	VM
3	50V AC 2	14	GND VM
4	GND IC	13	Vcc AMONT
5	V FLOAT	12	RESET
6	GND FLOAT	11	GND IC
7	GND IC	10	Vcc AMONT
8	GND VCOM	9	POWER LOSS

J 285 = COL/ROW

1	COL	1	16	COL	2
2		3	15		4
3		5	14		6
4		7	13		8
5	ROW	1	12	ROW	2
6		3	11		4
7		5	10		6
8		7	9		8

J 286 = to BODY SPLIT

1	RLTLFOUT		16	RLTLFIN
2	EXC	TLFOUT	15	NC
3		TLFIN	14	
4		TOTOUT	13	
5		TOTIN	12	
6		CASH	11	
7		MOTLIF	10	
8		MOTSHU	9	

J 287 = DISPLAY

1	Vcc		16	Vcc
2	GND		15	GND
3	DIG	D	14	SCAN B
4		C	13	SCAN A
5		A	12	NC
6		B	11	
7	SCAN C		10	SCAN C
8	RESET		9	NC

J 288 = to TLF

1	RLTLFIN		16	VCOM
2	RLTLFOUT		15	50V AC 1
3	50V AC 2		14	
4			13	NC
5	GND FLOAT		12	
6	TLF	A	11	
7		B	10	
8		C	9	TLF D

J 289 = MAGIC MOTORS

1	MOT	D	16	ROW 4 (D)	
2		B	15	50V AC 2	
3		A	14	ROW	2 (B)
4		C	13		1 (A)
5		E	12		3 (C)
6	VCOM		11		5 (E)
7	50V AC 1		10	SW LEFT	
8	SW RIGHT		9	NC	

EXTENTION BUS

1	Vcc	50	SOD
2		49	$\overline{RSTOUT}$
3		48	RST 5.5
4		47	SID
5	$\overline{HOLD}$	46	$\overline{TRAP}$
6	GND	45	GND
7		44	
8	CLK	43	$IO/\overline{M}$
9	$\overline{RD}$	42	$\overline{WR}$
10	AD 0	41	NC
11	AD 1	40	A 15
12	AD 2	39	A 14
13	AD 3	38	A 13
14	AD 4	37	A 12
15	AD 5	36	A 11
16	AD 6	35	A 10
17	AD 7	34	A 9
18	$\overline{DESELLATCH}$	33	A 8
19	A 7	32	A 6
20	NC	31	A 5
21	NC	30	A 4
22	A 3	29	A 2
23	A 1	28	A 0
24	NC	27	$\overline{DESELRAM}$
25	UARTCLK	26	$\overline{DESELROM}$

J 331 = to COUNTERS

1	TLFOUT	10	GI 2
2	TLFIN	9	GI 1
3	TOTOUT	8	NC
4	TOTIN	7	NC
5	CASH	6	COM

J 332 = to PLAYFIELD

1	50V AC 2		
2	MOTSHU	9	Y5 (Diode)
3	GI 1	8	Y4 (" ")
4	NC	7	X8
5		6	GI 2

J 334 = to LIFTER MOT.

1	LIFMOT Triac	2	50V AC 2

J 335 = J 337

1	COL	1	16	COL	2
2		3	15		4
3		5	14		6
4		7	13		8
5	ROW	1	12	ROW	2
6		3	11		4
7		5	10		6
8		7	9		8

J 336 = to CPU

1	RL TLFOUT		16	RL TLFIN
2	EXC	TLFOUT	15	NC
3		TLFIN	14	
4		TOTOUT	13	
5		TOTIN	12	
6		CASH	11	
7		MOTLIF	10	
8		MOTSHU	9	

J 338 = POWER from 143

1	GND	10	Y 5
2	VCOM	9	Y 4
3	50V AC1	8	Y 6
4	GI 2	7	X 8
5	GI 1	6	50V AC 2

J 341 = MAGIC MOTORS

1	MOT	D	16	ROW 4 (D)	
2		B	15	50V AC 2	
3		A	14	ROW	2 (B)
4		C	13		1 (A)
5		E	12		3 (C)
6	VCOM		11		5 (E)
7	50V AC 1		10	SW LEFT	
8	SW RIGHT		9	NC	

J 351 = from CPU

SEE J 288

J 352 = to TLF BOX

1	EXC	TLFIN	12	TLF D
2		TLFOUT	11	TLF C
3	COUNT. COM.		10	TLF B
4	NC		9	TLF A
5			8	TLF SW COM
6			7	NC

J 361

SEE J 352

J 372 = Xi Yi

1	Y 11	10	50V AC 2
2	Y 12	9	50V AC 1
3	Y 13	8	NC
4	Y 14	7	X 6
5	Y 15	6	Y 16

J 371 = to COILS

1	TOC 1	10	TOC 6
2	COM 1	9	TOC 5
3	COM 2	8	NC
4	TOC 2	7	TOC 4
5	TOC 3	6	NC

J 381

SEE J 285

J 382

1	ROW	7	10	R BUT
2		6	9	X BUT
3		5	8	TROUGH 0
4		5	7	MANLIFT
5	PULSLIFT		6	C.O. LIFT

J 383

1	ROW	7	10	TILT BODY
2		7	9	E
3		6	8	D
4	DOOR SW		7	C
5	A BUT		6	B

BUT

J 404 = Y

1	Y 10	10	Y 1
2	Y 9	9	Y 2
3	Y 8	8	Y 3
4	Y 7	7	Y 4
5	Y 6	6	Y 5

Scanned by CamScanner

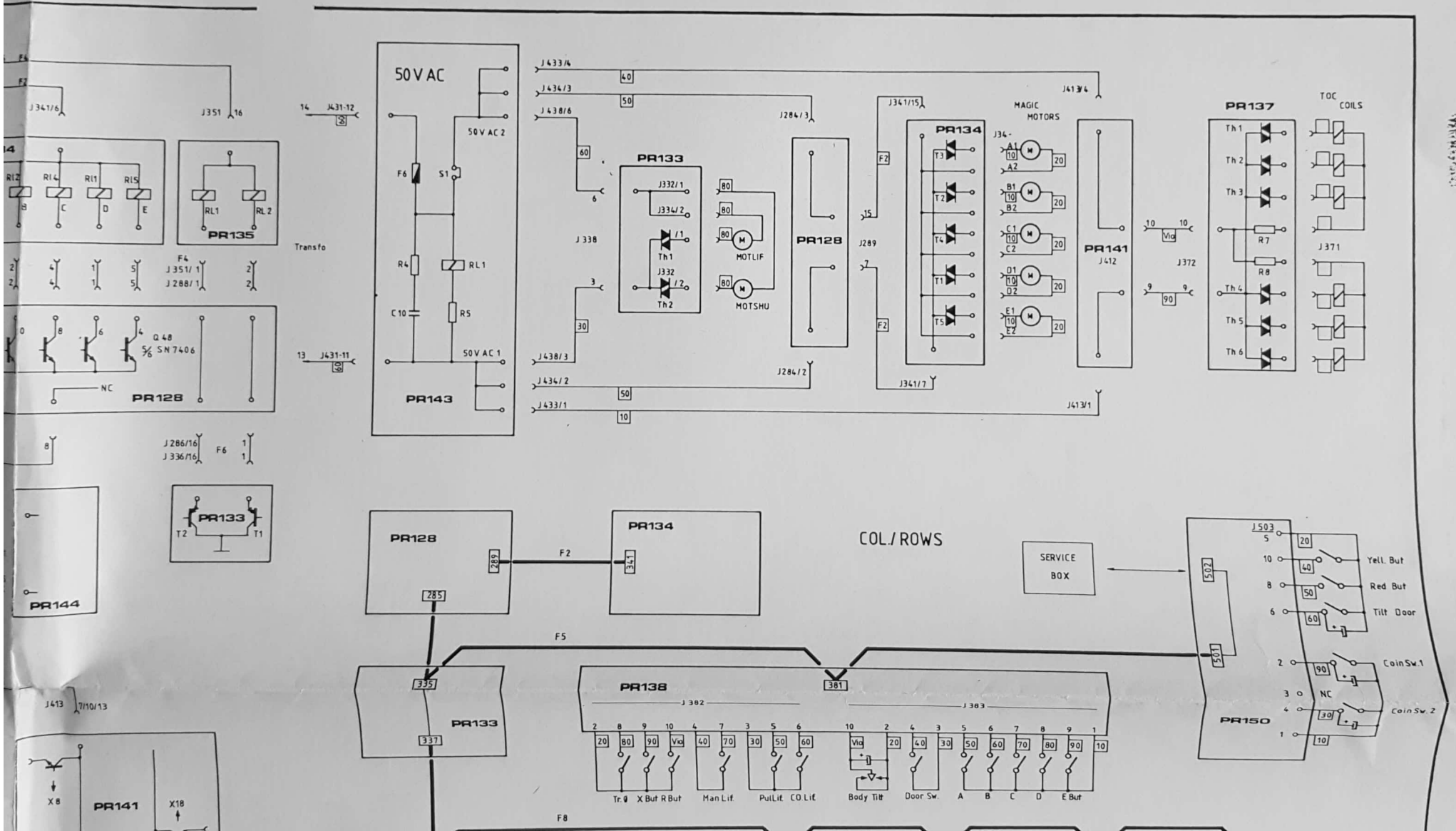

Scanned by CamScanner

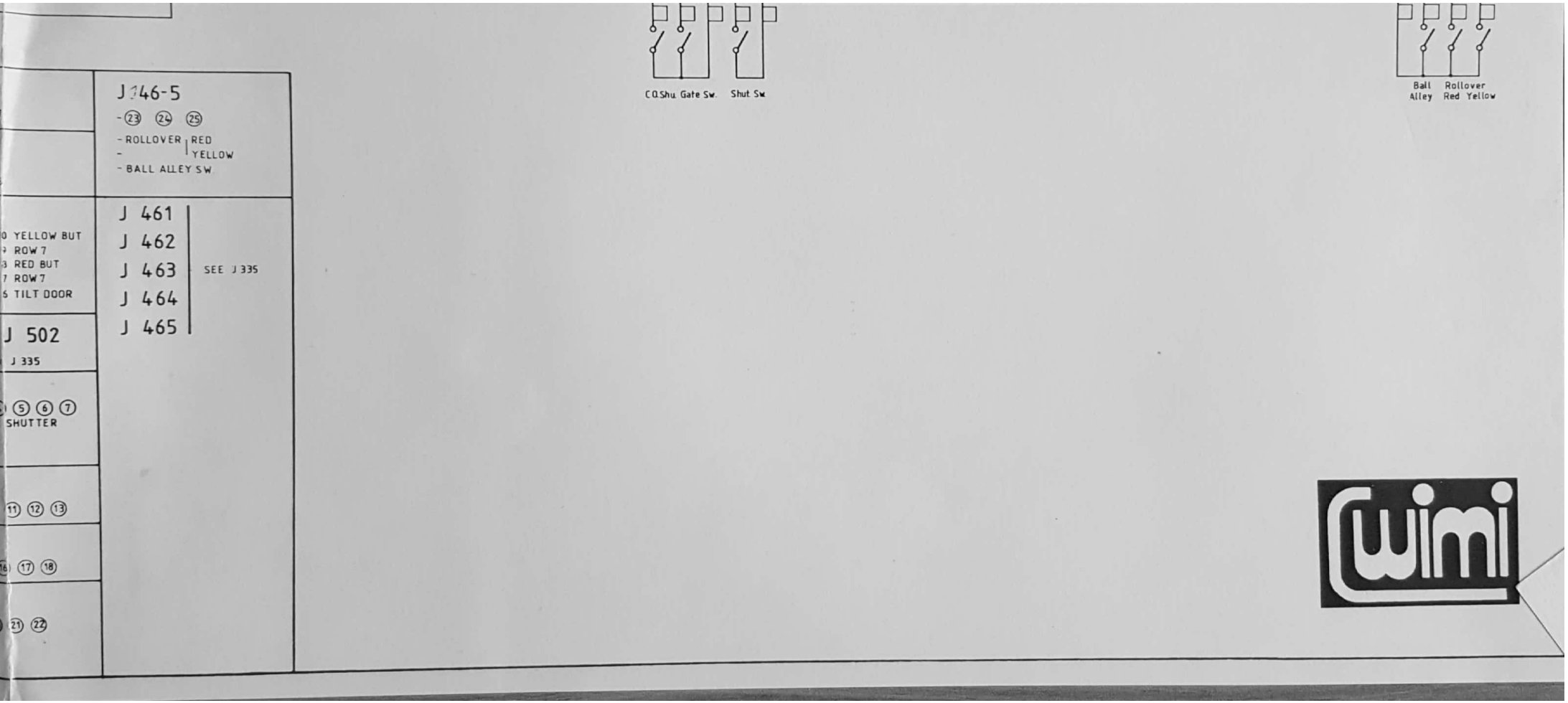

Scanned by CamScanner

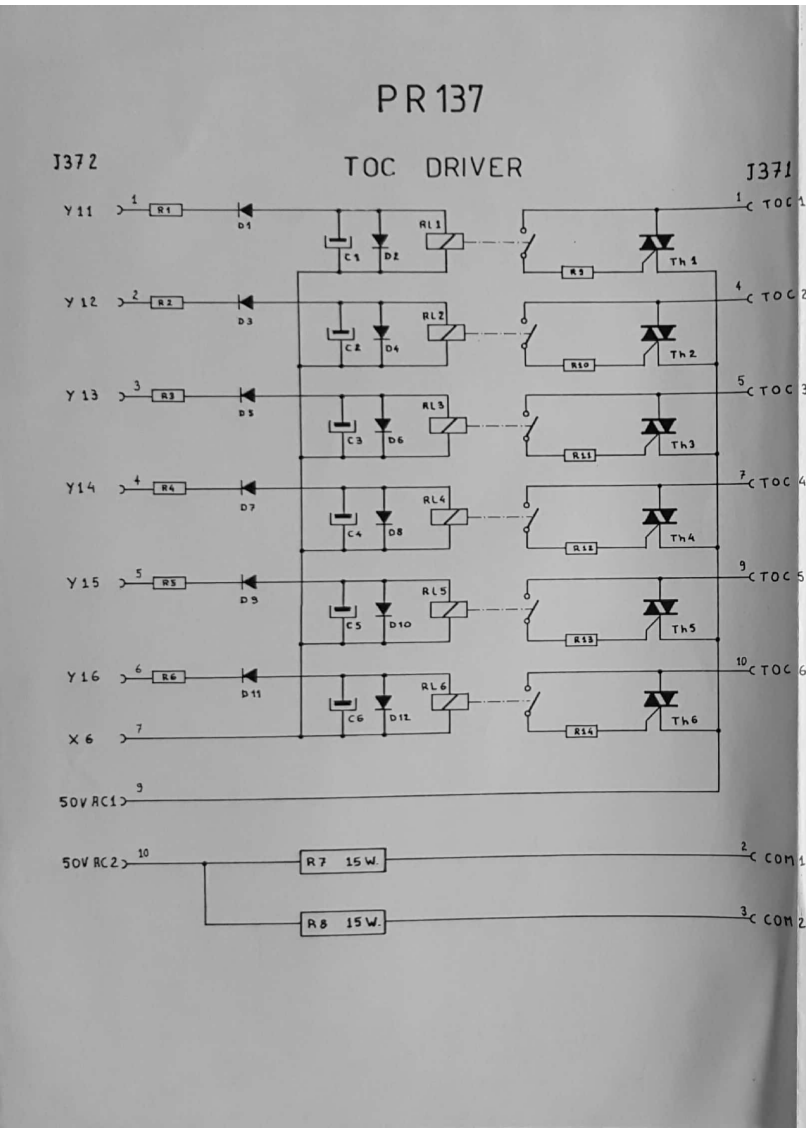

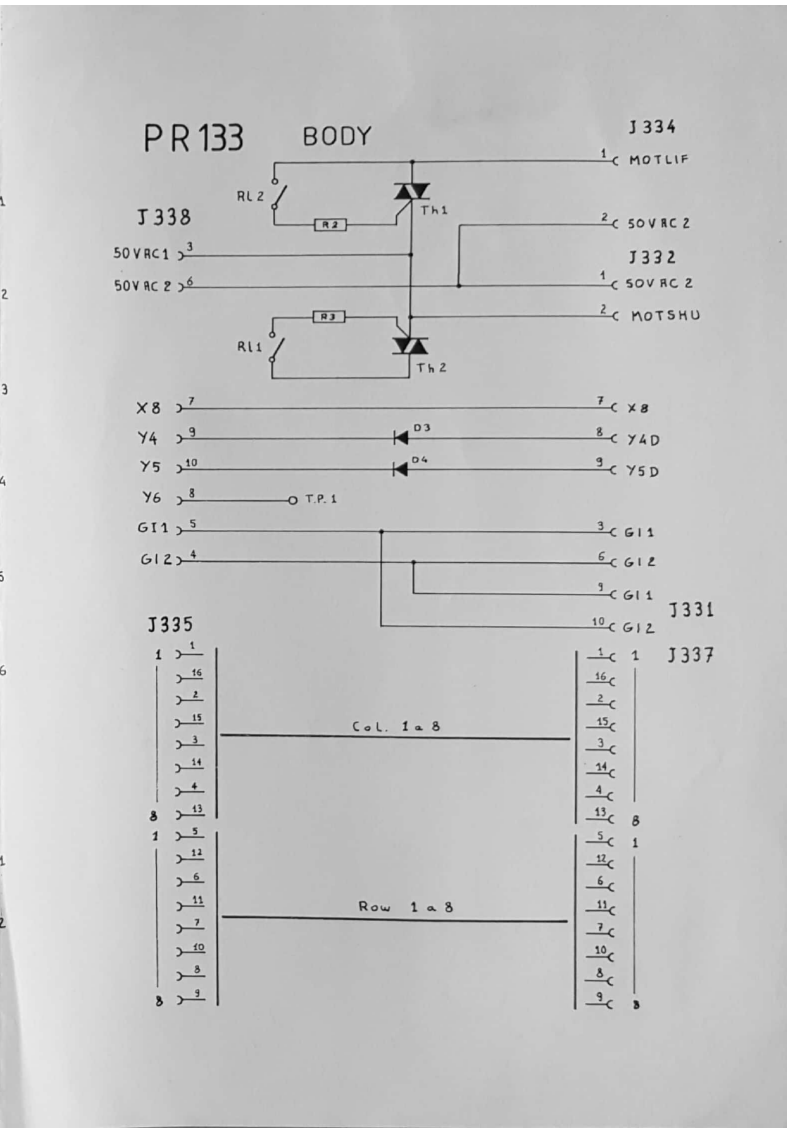

Scanned by CamScanner

LITE MATRIX

	Y 1	Y 2	Y 3	Y 4	Y 5	Y 6	Y 7	Y 8	Y 9	Y 10	Y 11	Y 12	Y 13	Y 14	Y 15	Y 16	Y 17	Y 18
X 1	A	B	C	D	E	AA	BB	CC	DD	EE	RED 4	R 8	R 16	R 32	R 64	R 128	R 192	L 118
X 2	F	G	H	I	J	FF	GG	HH	II	JJ	YELLOW 4	Y 8	Y 16	Y 32	Y 64	Y 128	Y 192	L 218
X 3	K	L	M	N	O	KK	LL	MM	NN	OO	GREEN 4	G 8	G 16	G 32	G 64	G 128	G 192	L 318
X 4	P	Q	R	S	T	PP	QQ	RR	SS	TT	W 4	W 8	W 16	W 32	W 64	W 128	W 192	L 418
X 5	U	V	W	X	Y	UU	VV	WW	XX	YY	STRIPPED DIAG.	L 512	L 513	L 514	L 515	L 516	L 517	L 518
X 6	EB BOX	1ST.	EXTRA	BALL	2D.	EXTRA	BALL	3RD.	EXTRA	BALL	SND 1	SND 2	SND 3	SND 4	SND 5	SND 6	SND 7	SND 8
X 7	BONUS BOX 1	1 →	2 →	3 →	4 →	5 →	BONUS BOX 2	Ang 2	Ang 3	1 →	2 →	3 →	4 →	A B	C	D	E	L 718
X 8	CORNER	4 STAR AS GREEN	EXTRA CARD	ROL. OV. RED	ROL. OV. YELLOW	COIN LOCKOUT	TILT	OK	BEF 4	BEF 5	SELECT NOW	ROL. OV. CENTER	L 813	L 814	L 815	L 816	L 817	L 818

SWITCHES MATRIX

	COL 1	COL 2	COL 3	COL 4	COL 5	COL 6	COL 7	COL 8
ROW 1	1	2	3	4	5	6	7	SHUTTER SW.
ROW 2	8	9	10	11	12	13	BALL GATE	CARRY OVER SHUTTER
ROW 3	14	15	16	17	18	19	20	21
ROW 4	22	23	24	25	ROLLOVER RED SW.	ROLL OVER YELLOW SW.	BALL ALLEY SW.	SW 48
ROW 5	TROUG 1	TROUG 2	TROUG 3	TROUG 4	TROUG 7	C. O. LIFT	PULSE LIFT	MAN. LIFT
ROW 6	R BUT	X BUT	Z BUT	DOOR SW.	TROUG Ø	TROUG 5	TROUG 6	SW 68
ROW 7	TILT SW.	RED BUT	YELLOW BUT	A BUT	B BUT	C BUT	D BUT	E BUT
ROW 8	COIN SW. 1	COIN SW. 2	SV1	SV2	SV3	SV4	SV5	SV6

Scanned by CamScanner

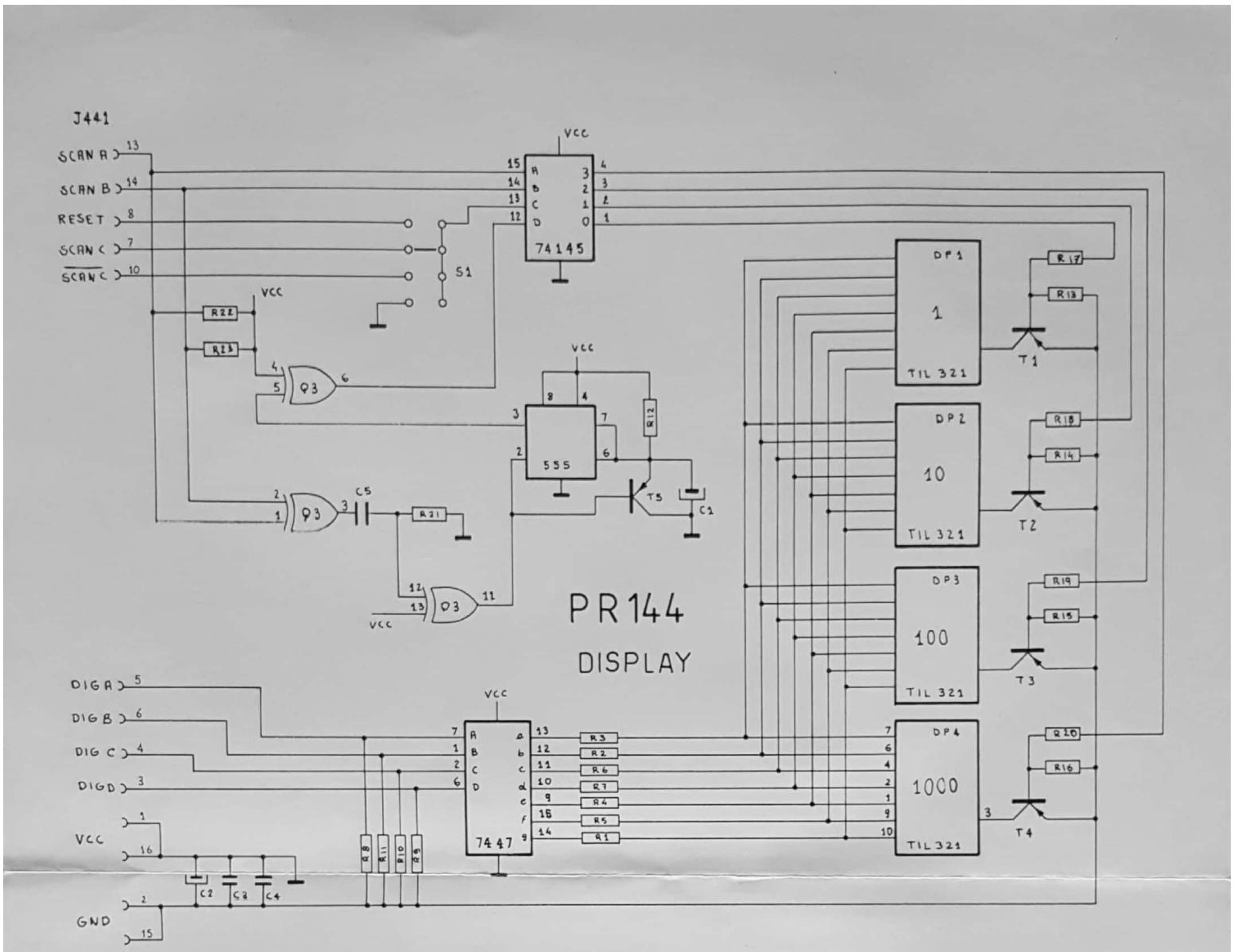

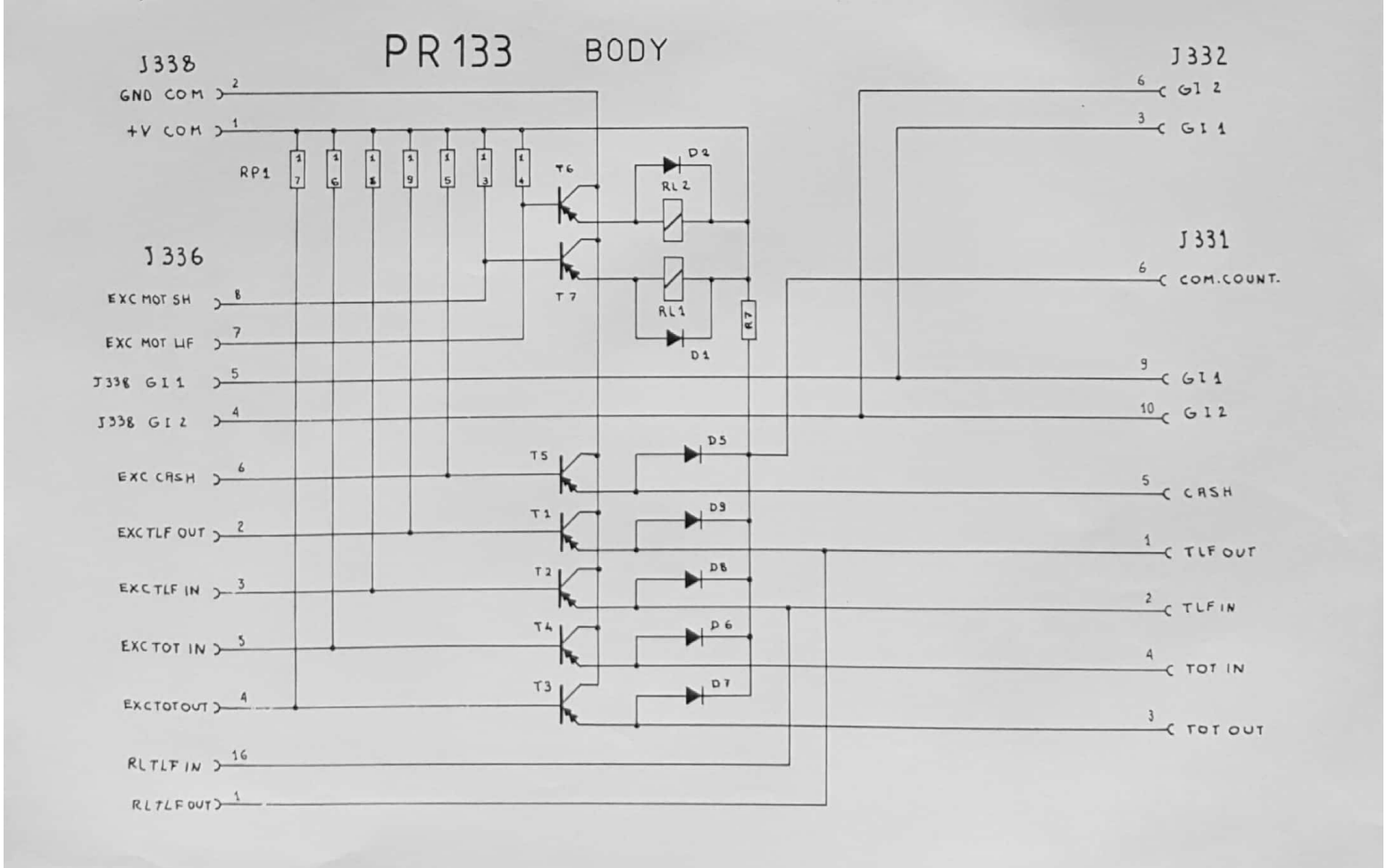

Scanned by CamScanner

PR141

POWER DRIVERS

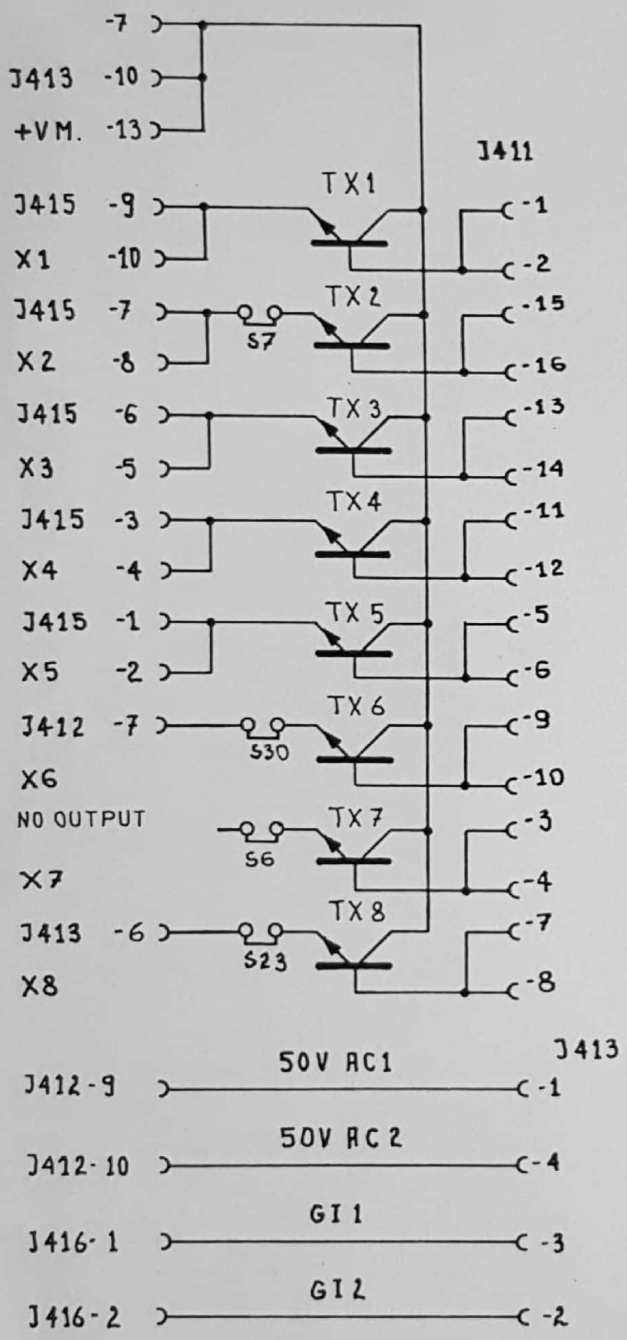

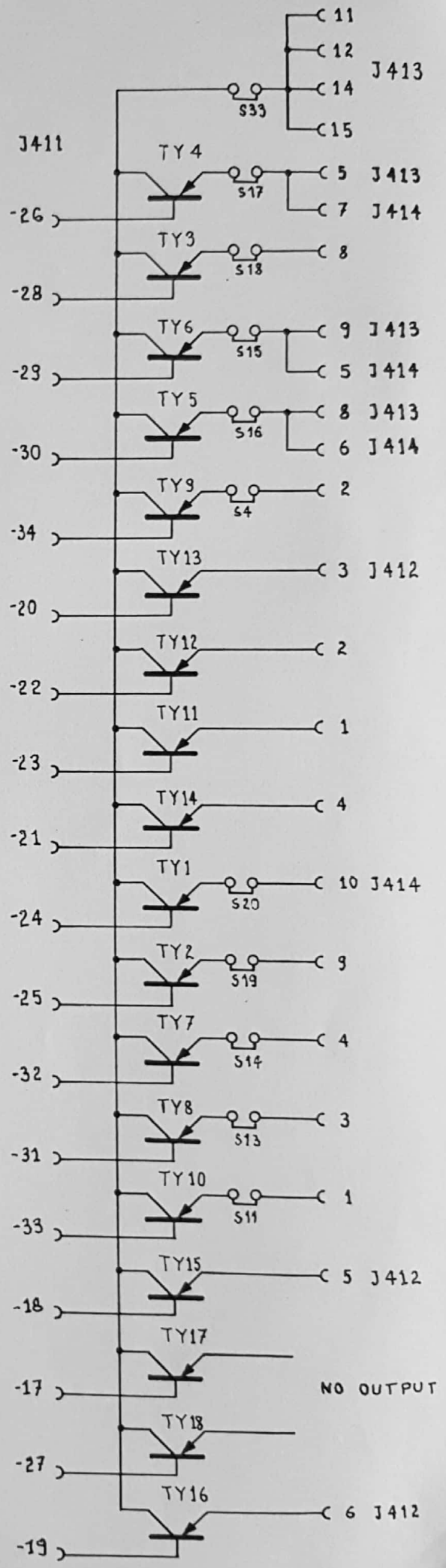

Scanned by CamScanner

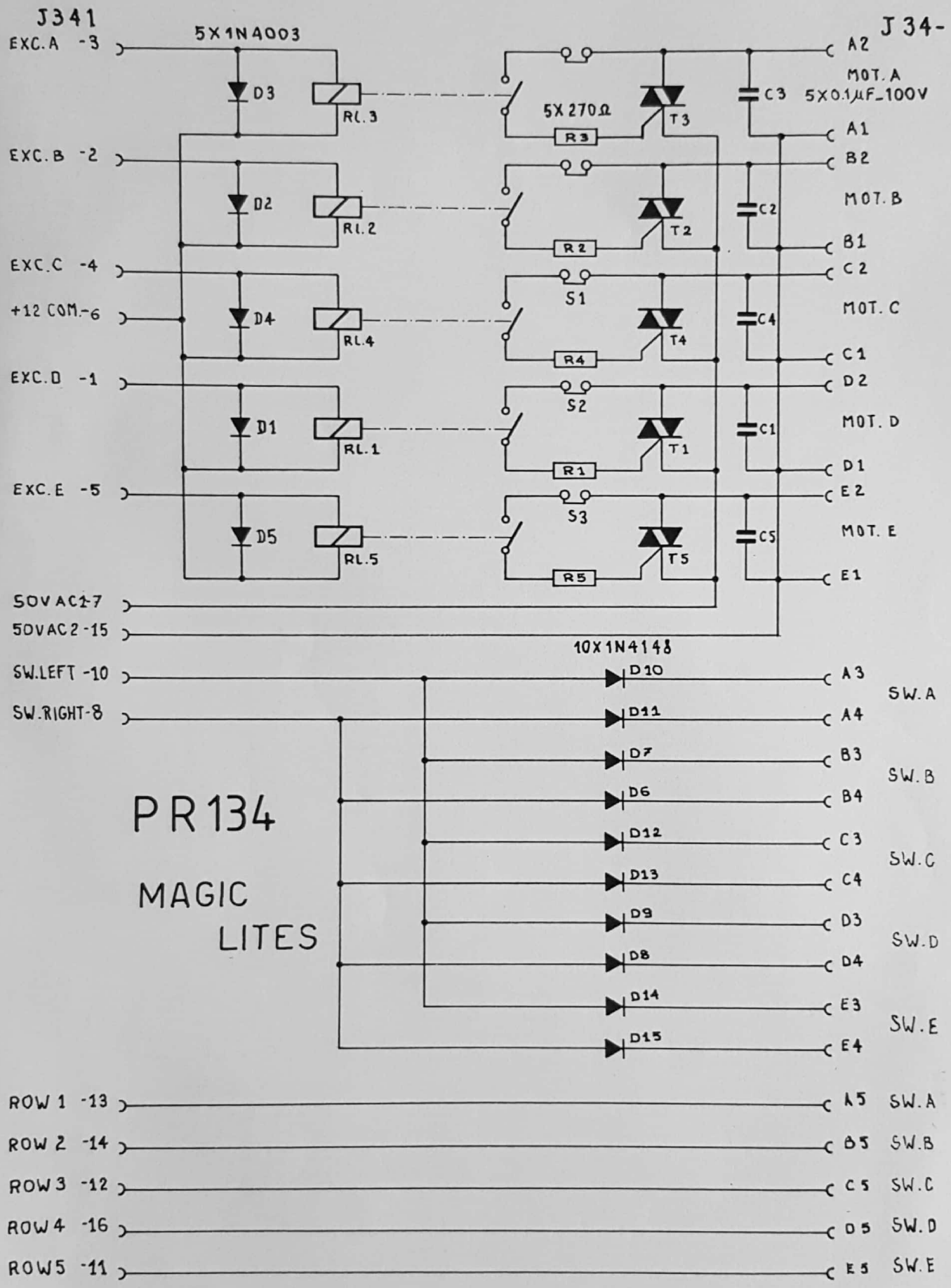

Scanned by CamScanner

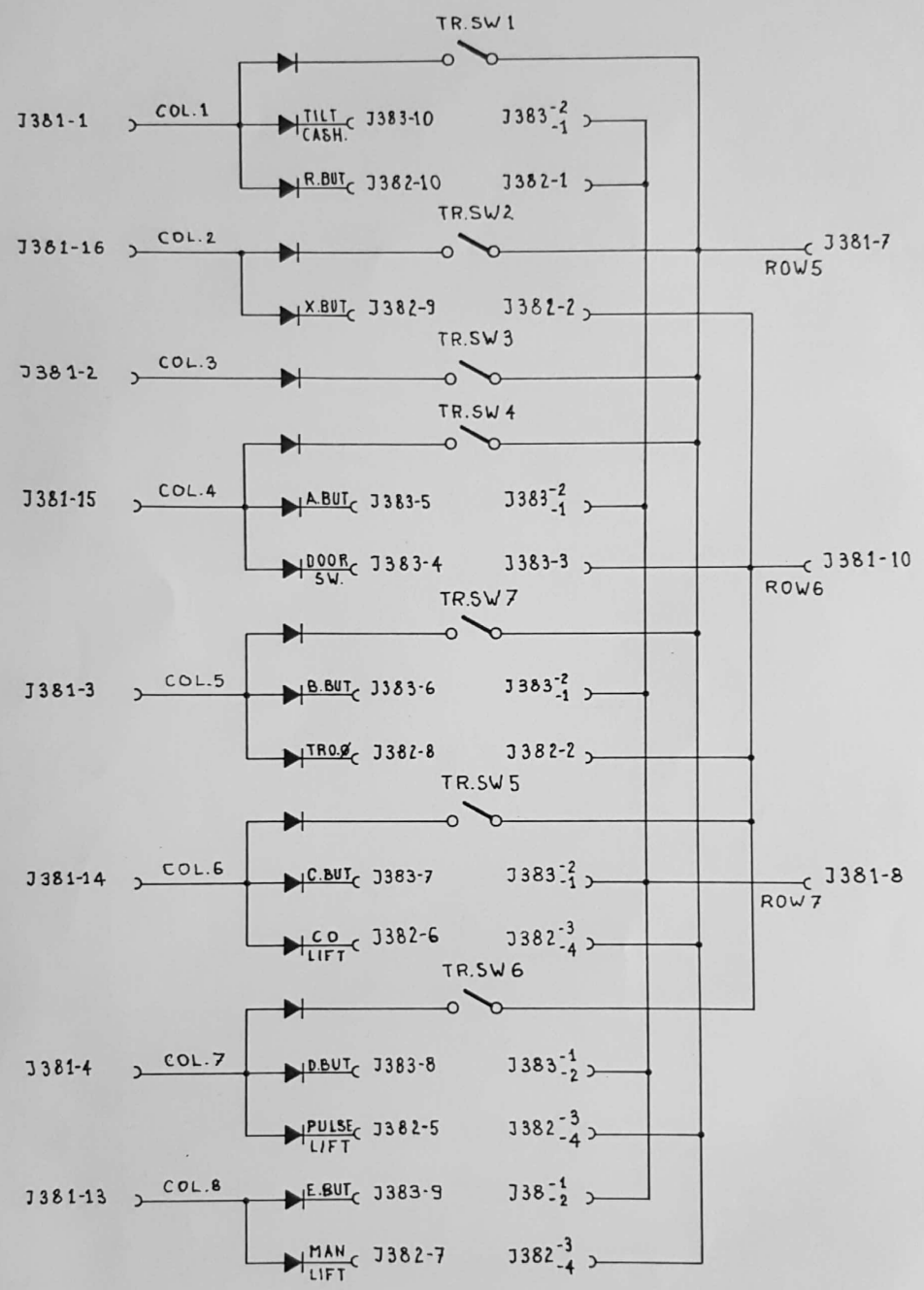

PR138 TROUGH SW.

Scanned by CamScanner

PR 150 SERVICE BOX

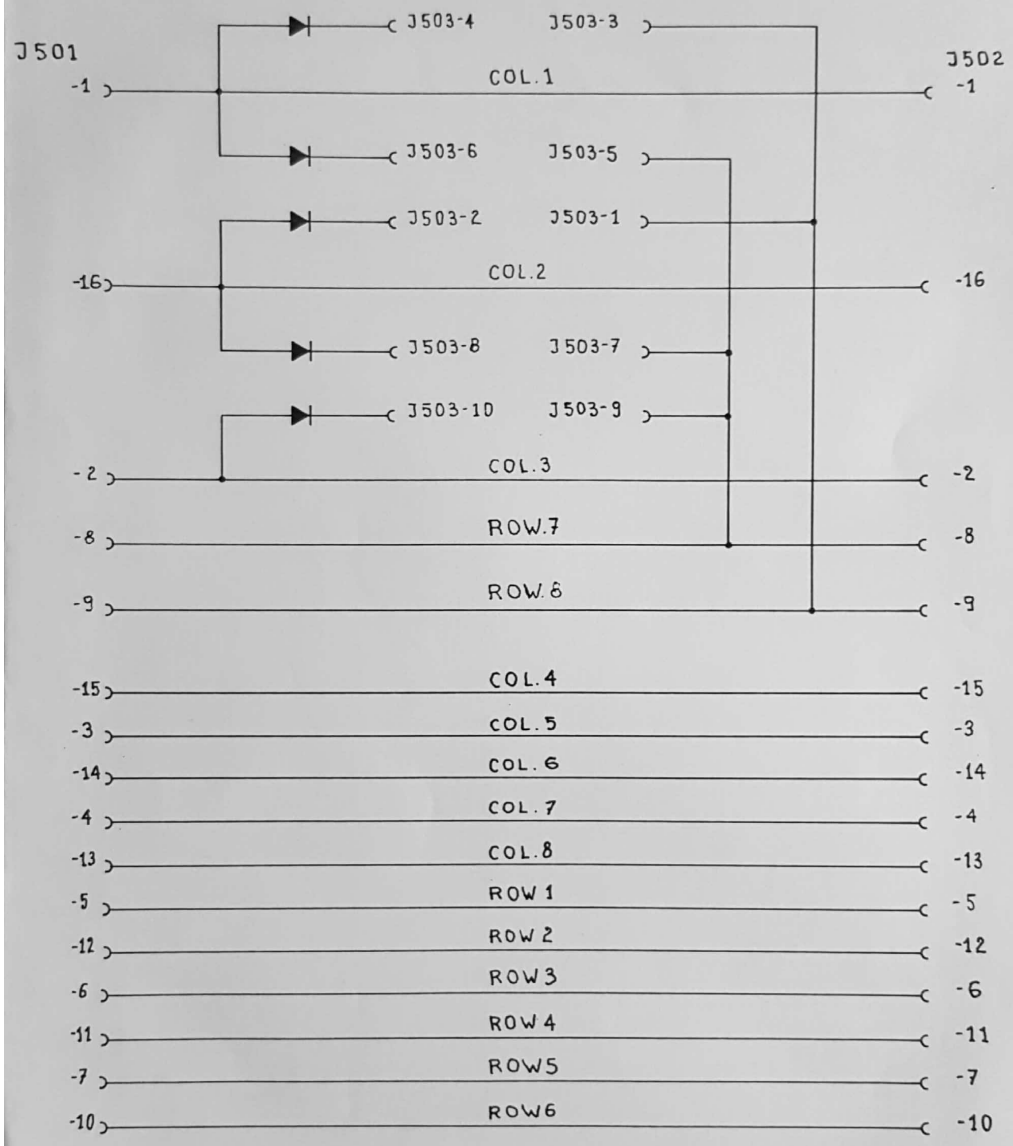

Scanned by CamScanner

PR135 TLF IN

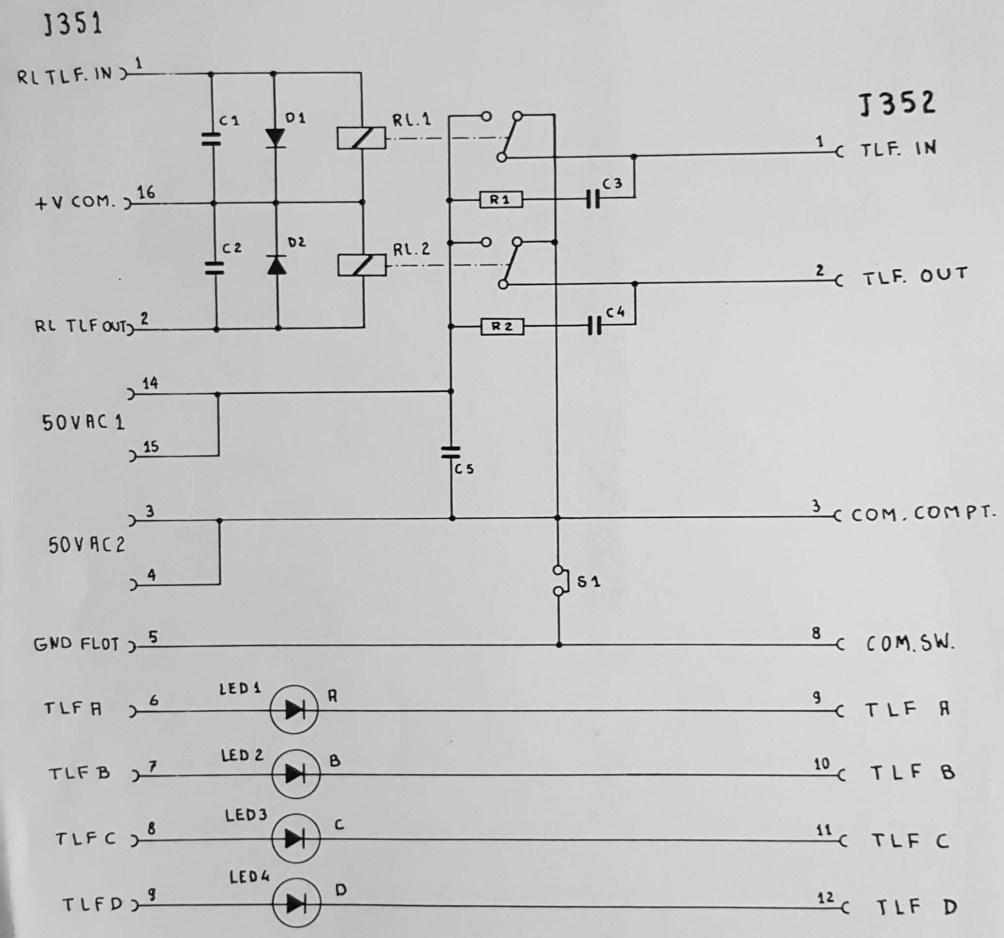

Scanned by CamScanner

REMOTE OUT PR 136

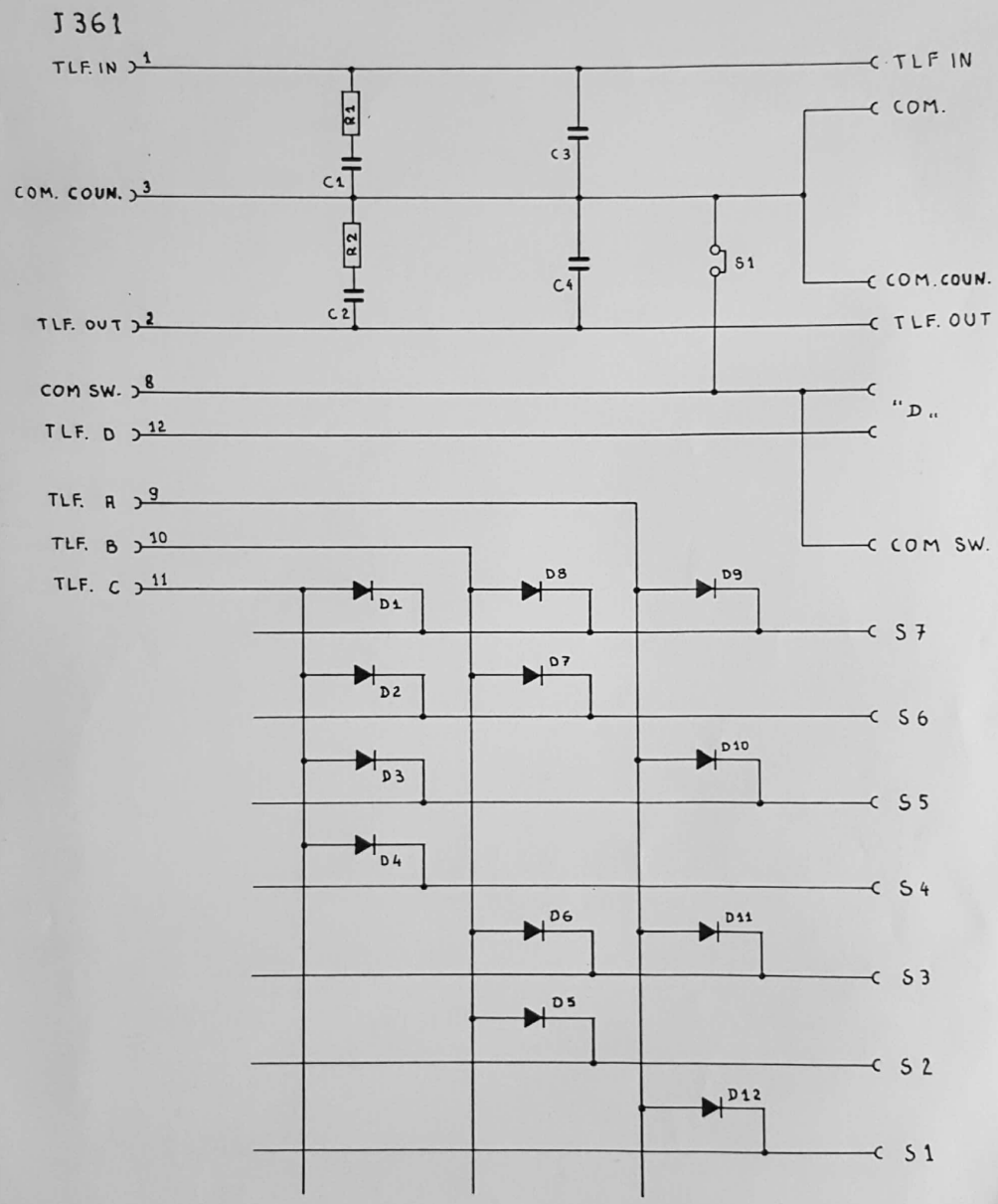

Scanned by CamScanner

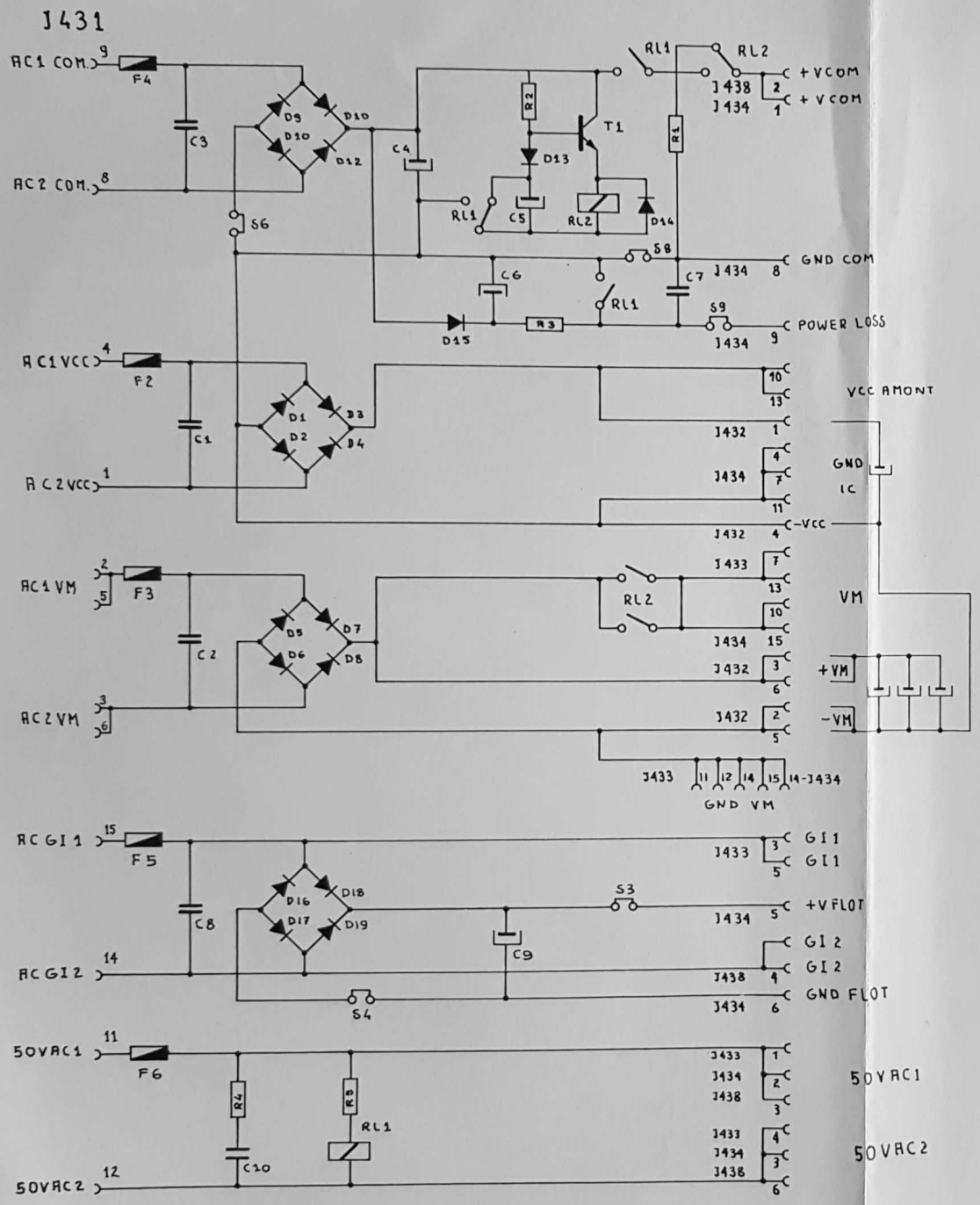

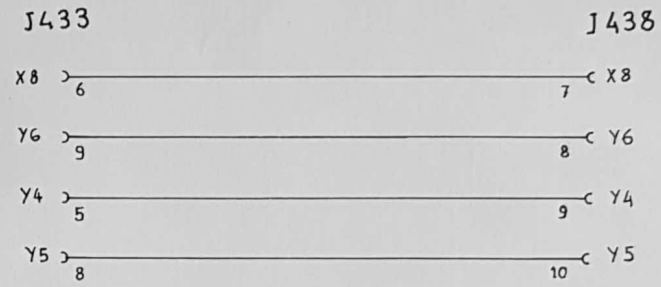

PR143

POWER SUPPLY

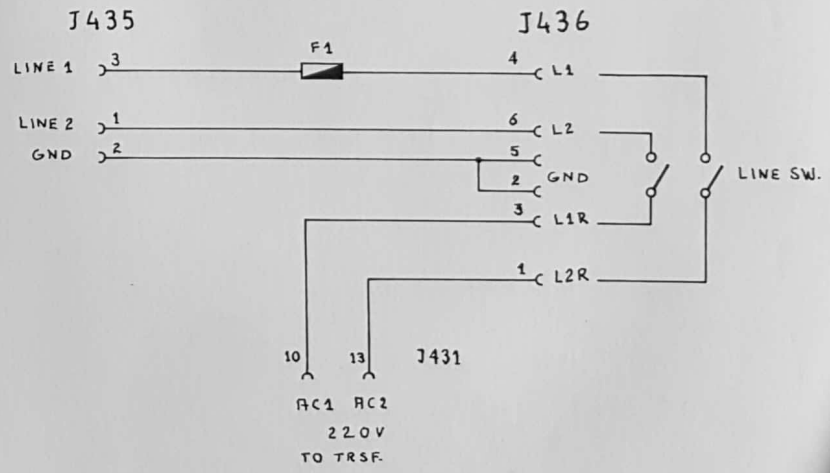

Scanned by CamScanner

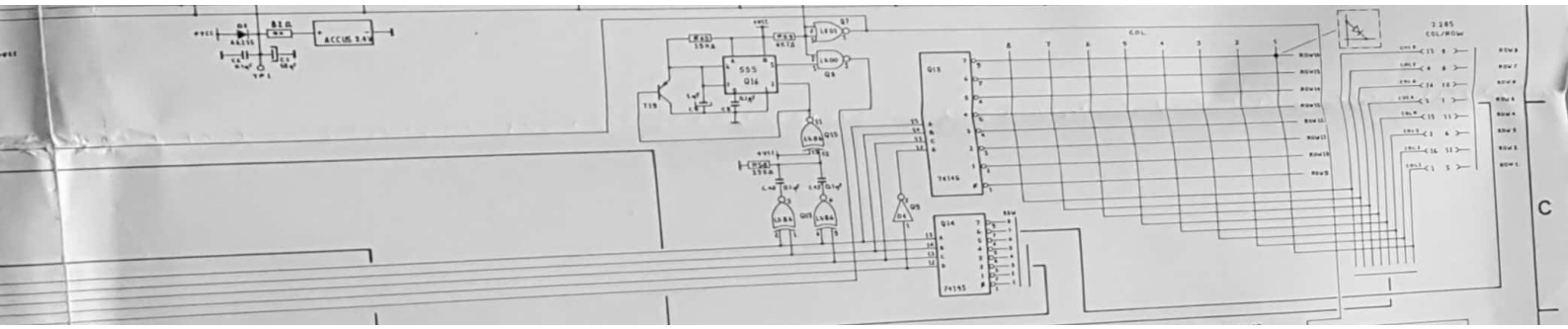

Scanned by CamScanner

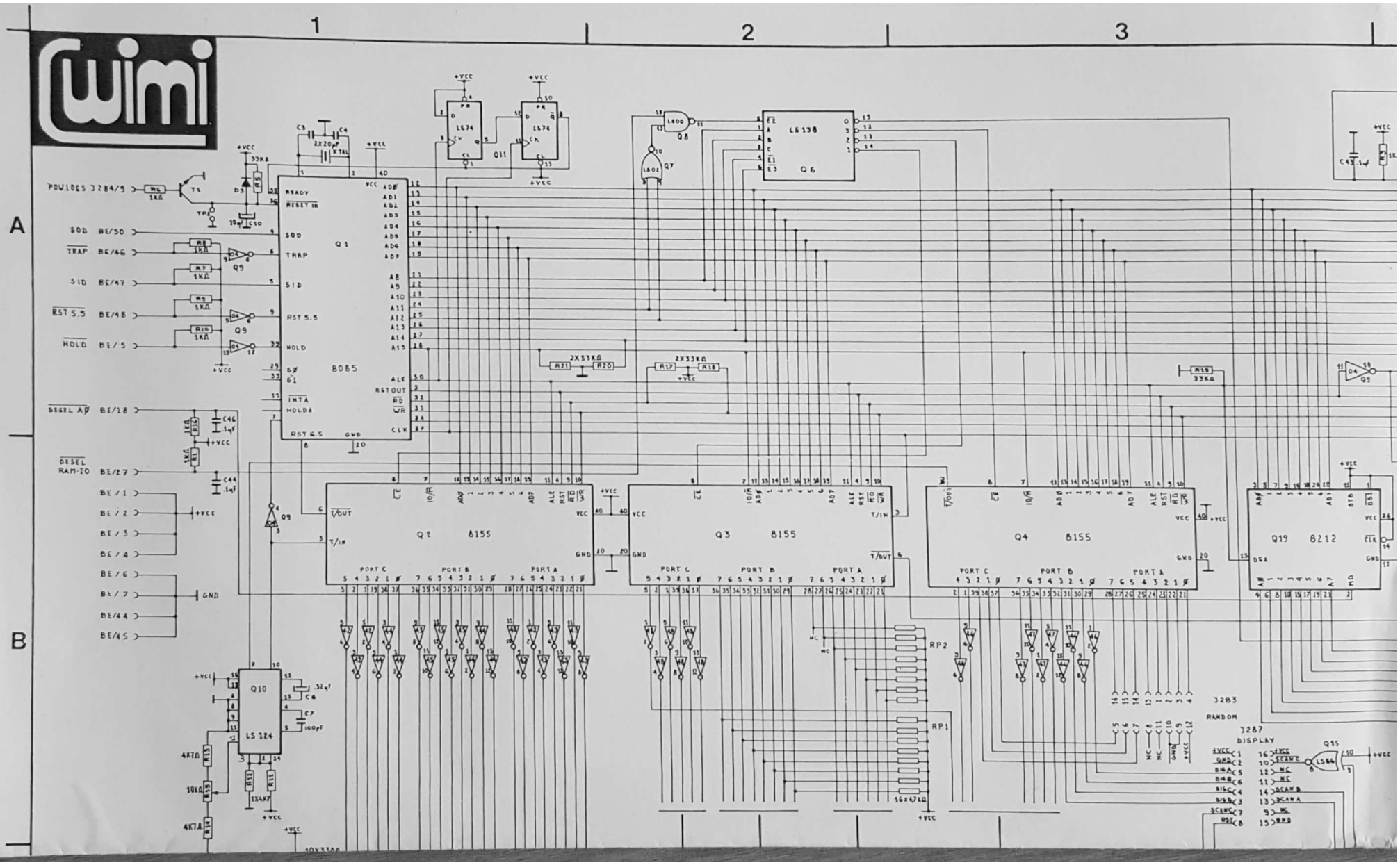

Scanned by CamScanner

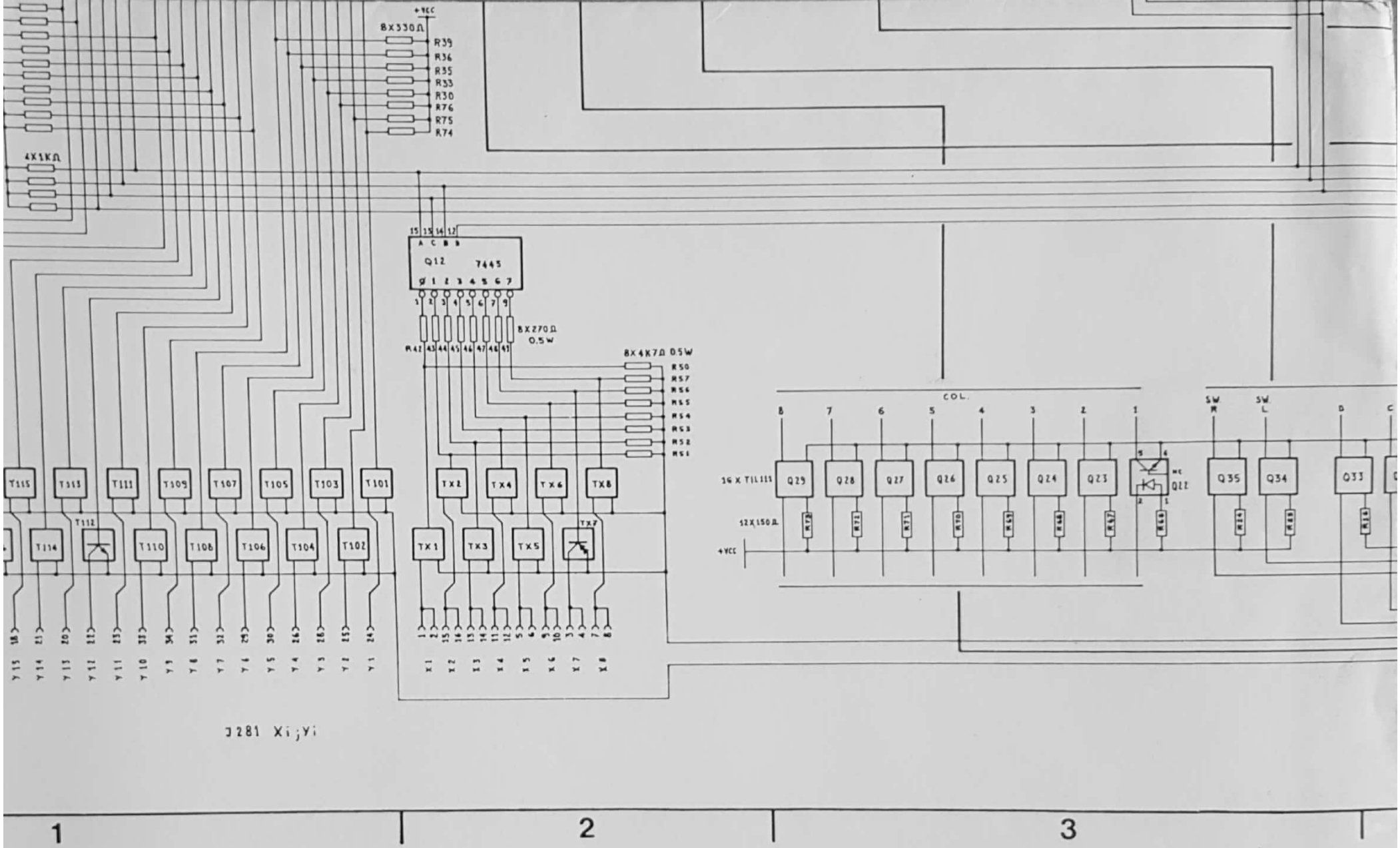

Scanned by CamScanner

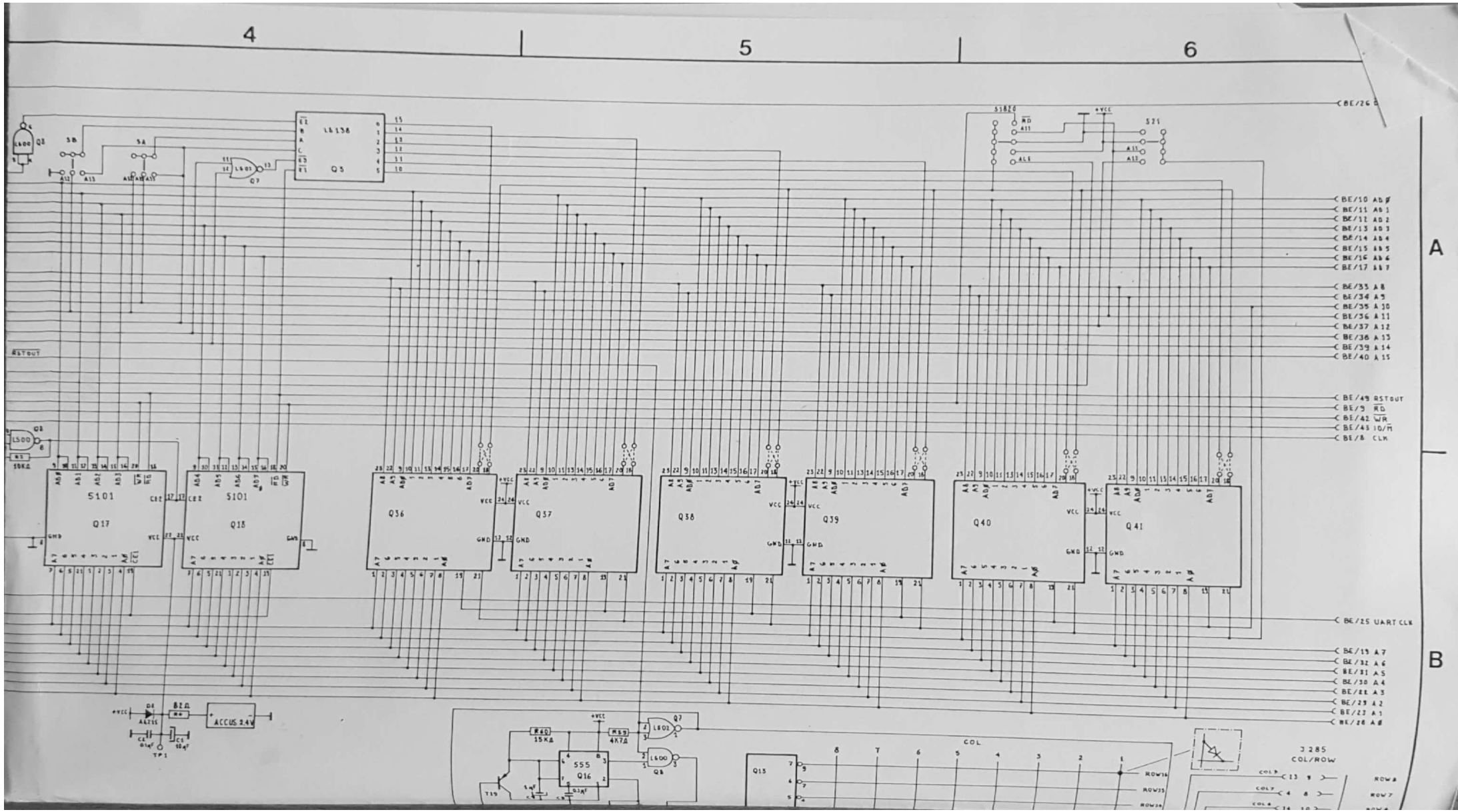

Scanned by CamScanner

Scanned by CamScanner