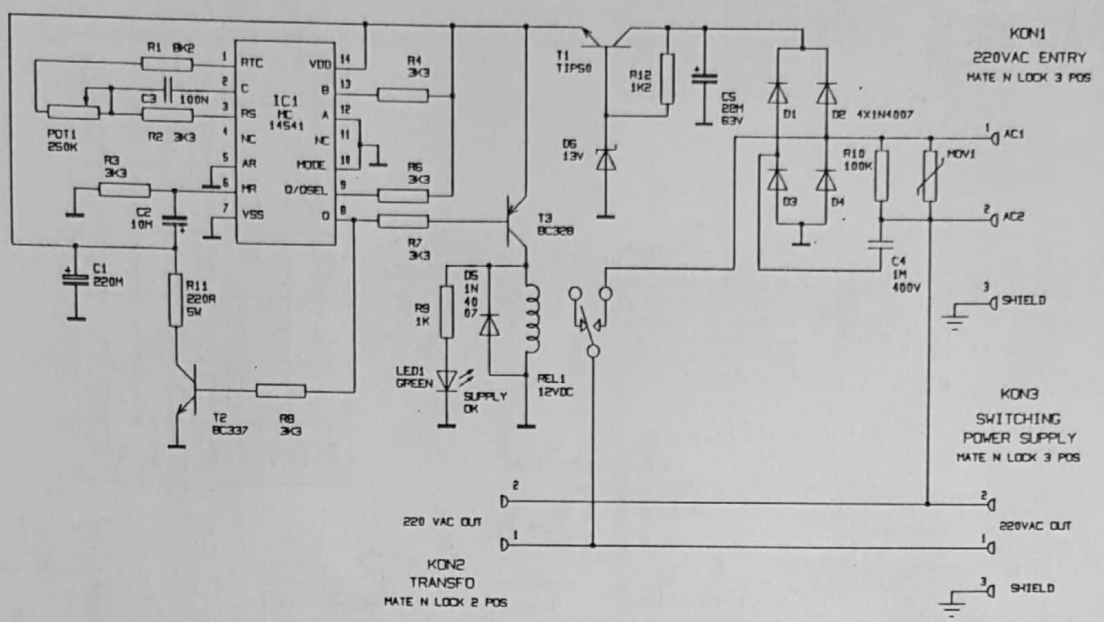

PR643 LINE IN TIMER

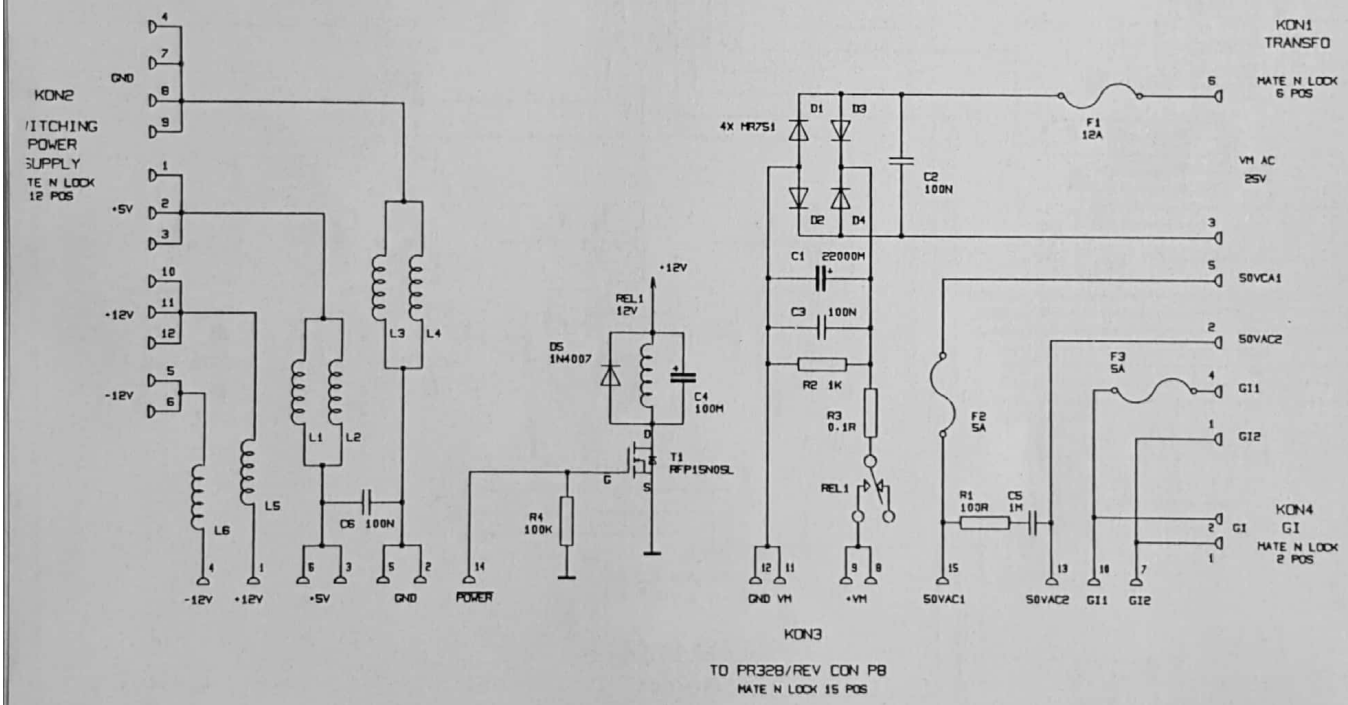

PR644 POWER DISPATCHER

wimi	CHIEF ENG: JC. FRANCK	DATE: 06/01/89	PR643 - PR644
	CHECK ENG: W. DE BRUECKER	REV: 02	
	DRAW ENG: R. DESMET	SHEET: 1 OF 1	LINE IN TIMER - POWER DISPATCHER
	NV W. MICHIELS WIJNGAARDSTRAAT 36 B-9451 KERKSKEN 053/789494		

Scanned by CamScanner

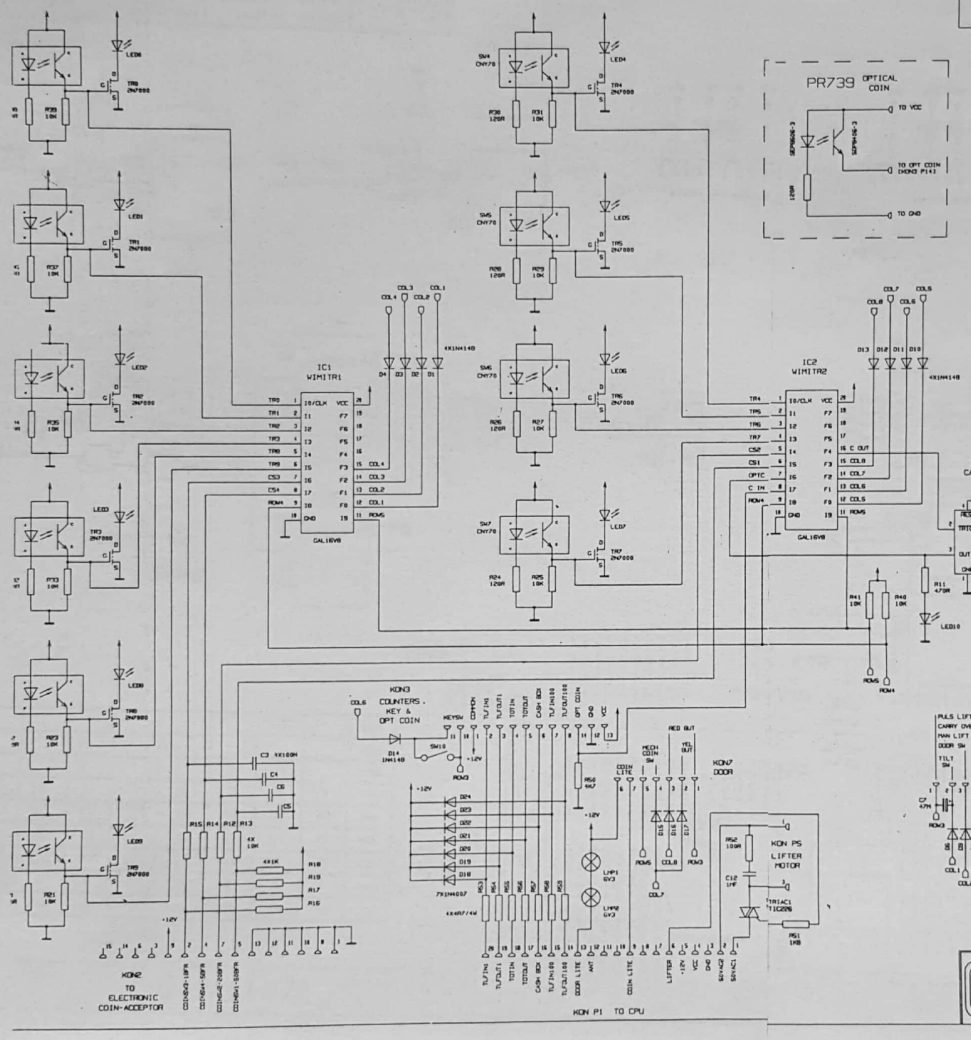

A	COL1	COL2	COL3	COL4	COL5	COL6	COL7	COL8
ROW1								
ROW2								
ROW3	TILT SW	DOOR SW	MAN LIFT	CD LIFT	PULS LIFT	KEY SW	YELLOW OUT	RED OUT
ROW4	TROUGH0	TROUGH1	TROUGH2	TROUGH3	TROUGH4	TROUGH5	TROUGH6	TROUGH7
ROW5	TROUGH8	TROUGH9	COIN SW1	COIN SW2	COIN SW3	COIN SW4	MECH COIN	OPT COIN
ROW6								
ROW7				RT UDLR	RT UP	RT DOWN	RT RIGHT	RT LEFT
ROW8			SERV	+1	-1	SEE	OUT	IN

Scanned by CamScanner

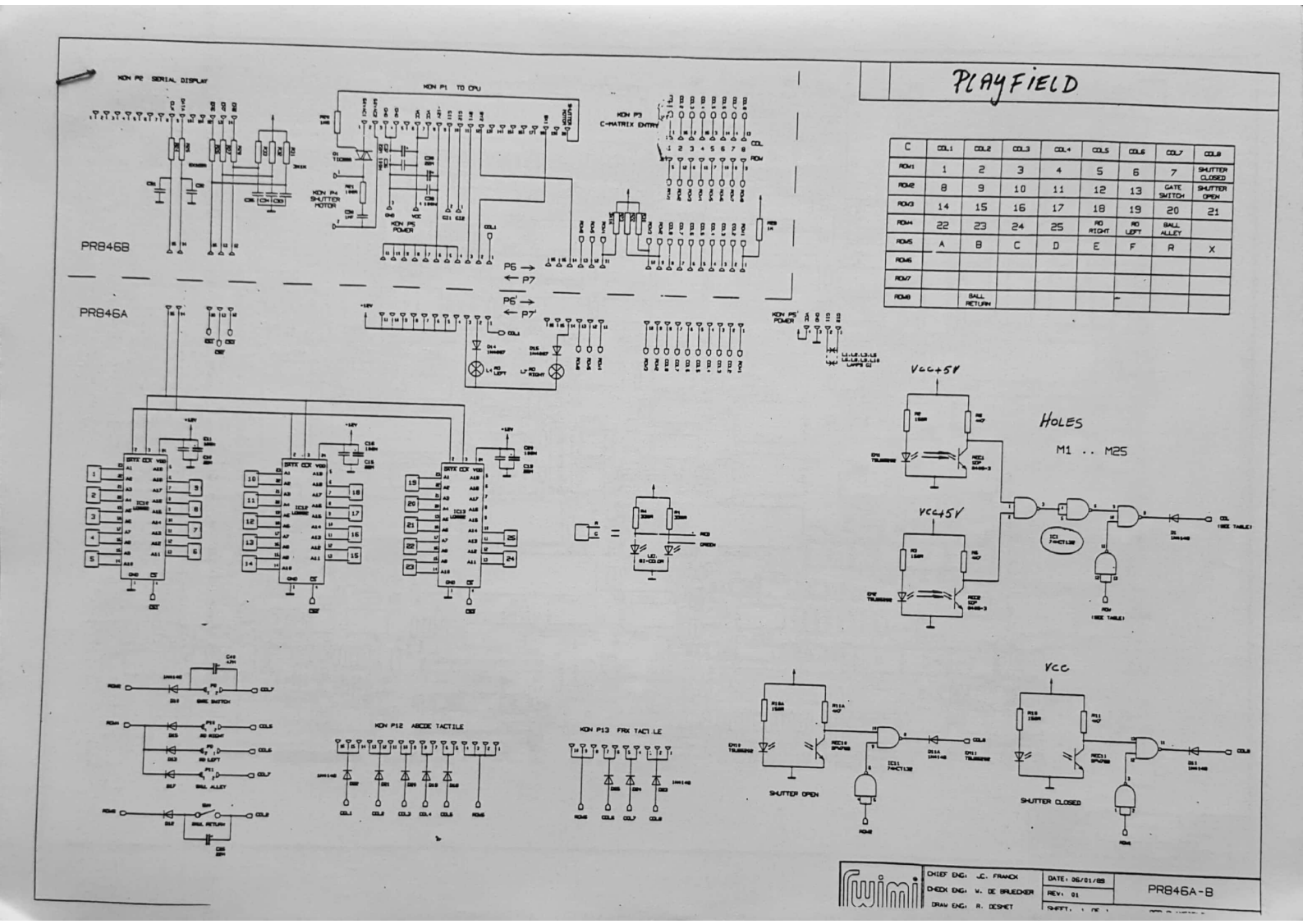

C	COL1	COL2	COL3	COL4	COL5	COL6	COL7	COL8
ROW1	1	2	3	4	5	6	7	SHUTTER CLOSED
ROW2	8	9	10	11	12	13	GATE SWITCH	SHUTTER OPEN
ROW3	14	15	16	17	18	19	20	21
ROW4	22	23	24	25	RO RIGHT	RO LEFT	BALL ALLEY	
ROW5	A	B	C	D	E	F	R	X
ROW6								
ROW7								
ROW8		BALL RETURN						

Scanned by CamScanner

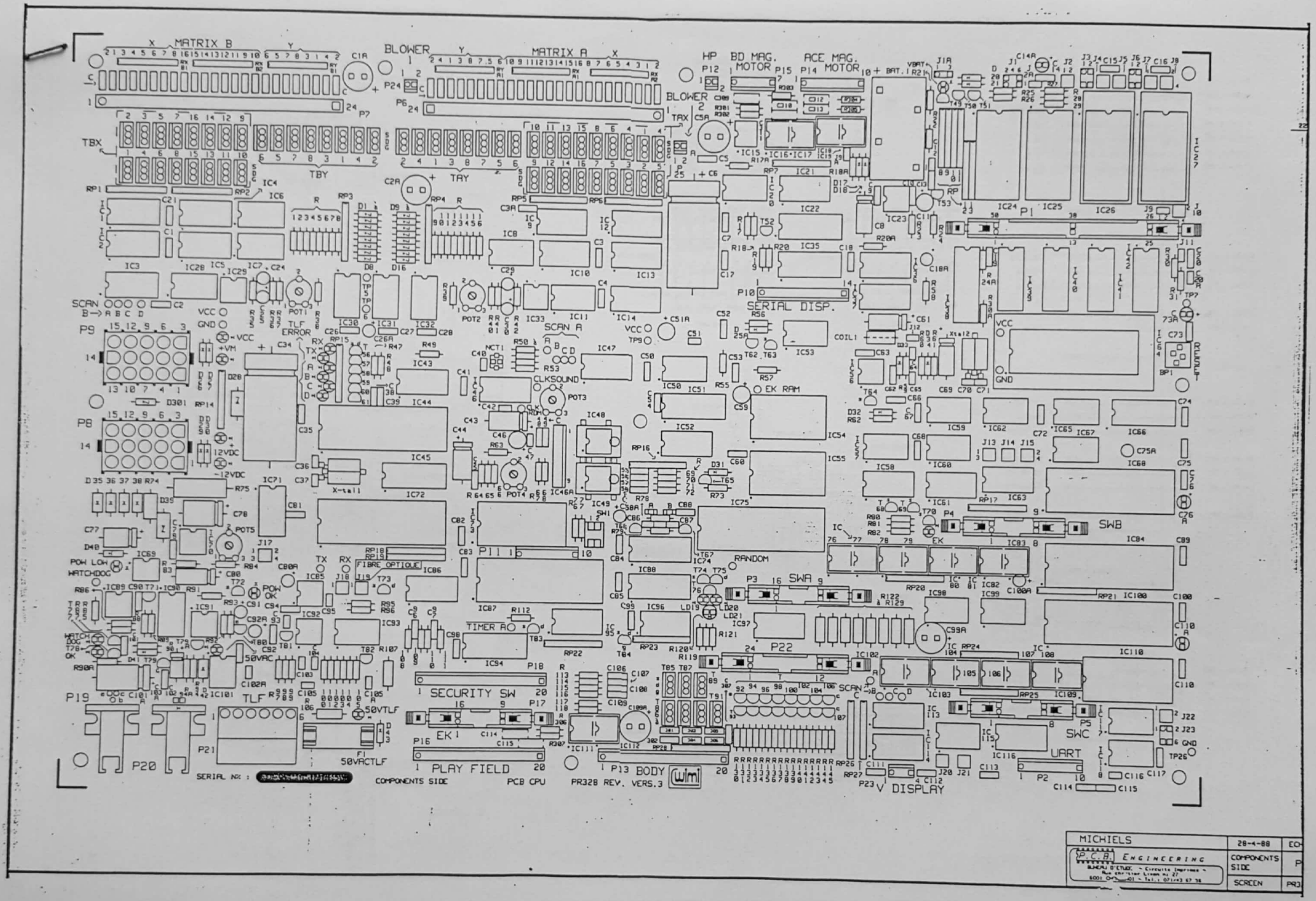

Scanned by CamScanner

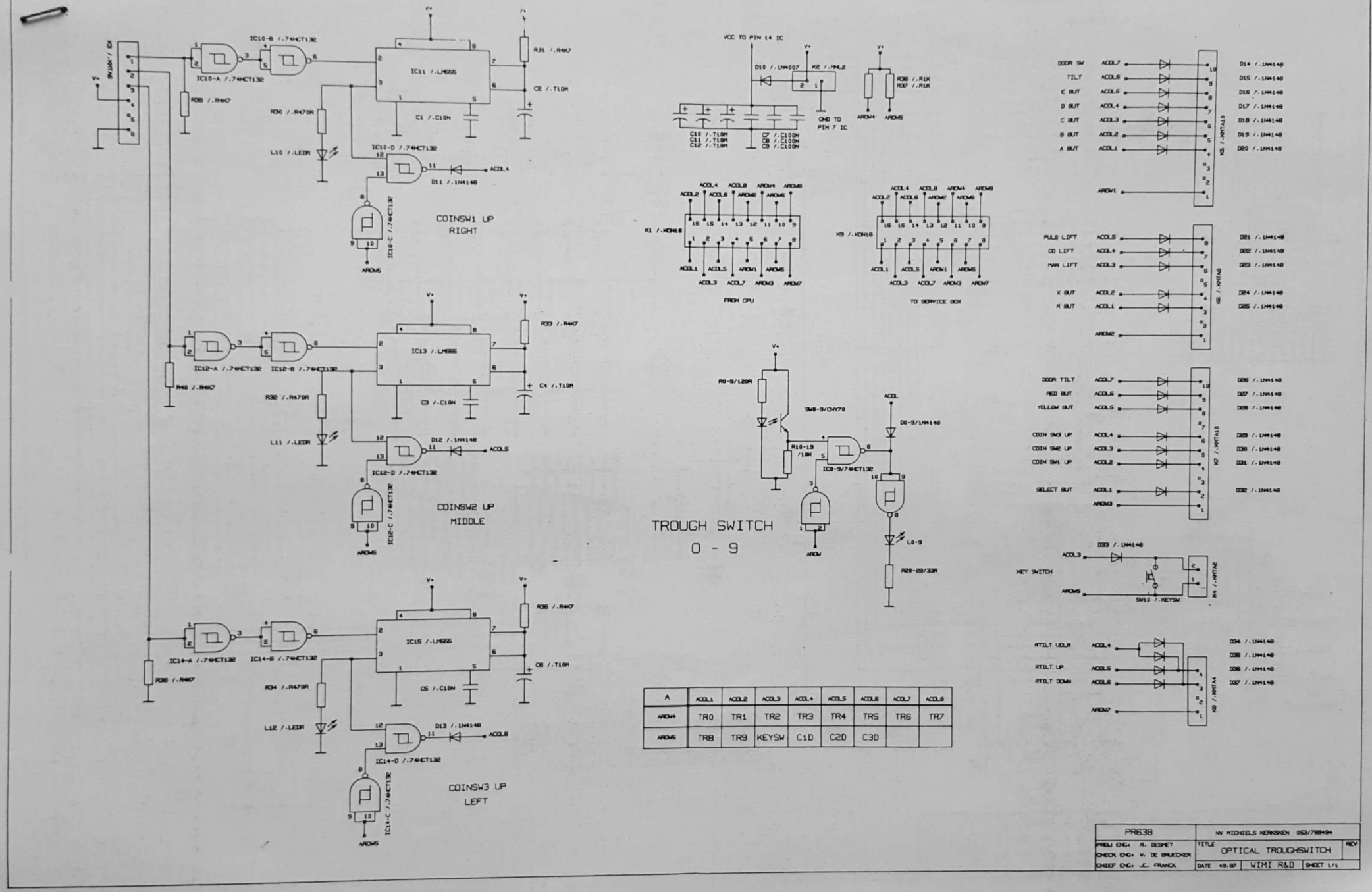

A	ACOL1	ACOL2	ACOL3	ACOL4	ACOL5	ACOL6	ACOL7	ACOL8
AROW4	TR0	TR1	TR2	TR3	TR4	TR5	TR6	TR7
AROW5	TR8	TR9	KEYSW	C1D	C2D	C3D		

Scanned by CamScanner

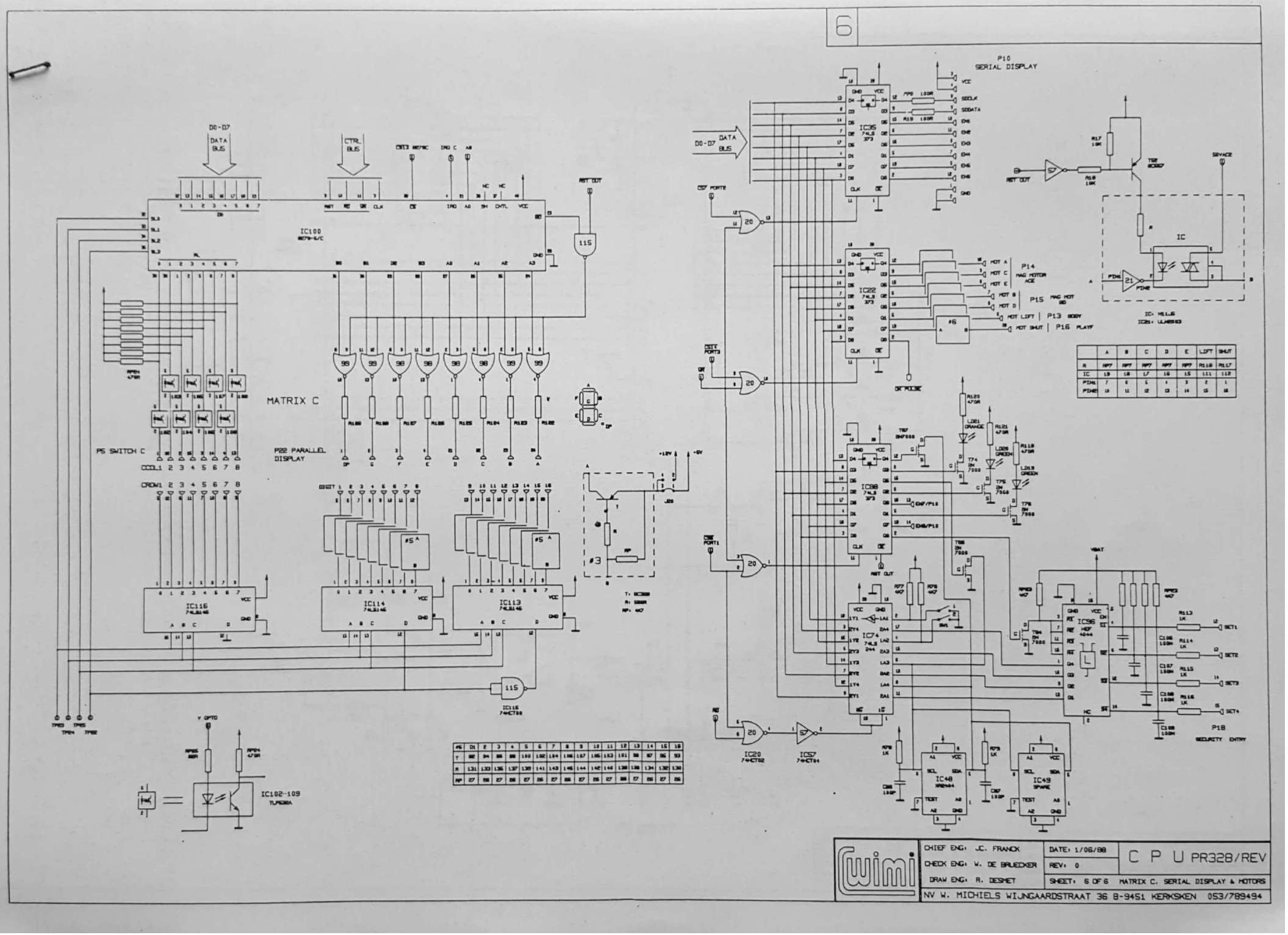

Scanned by CamScanner

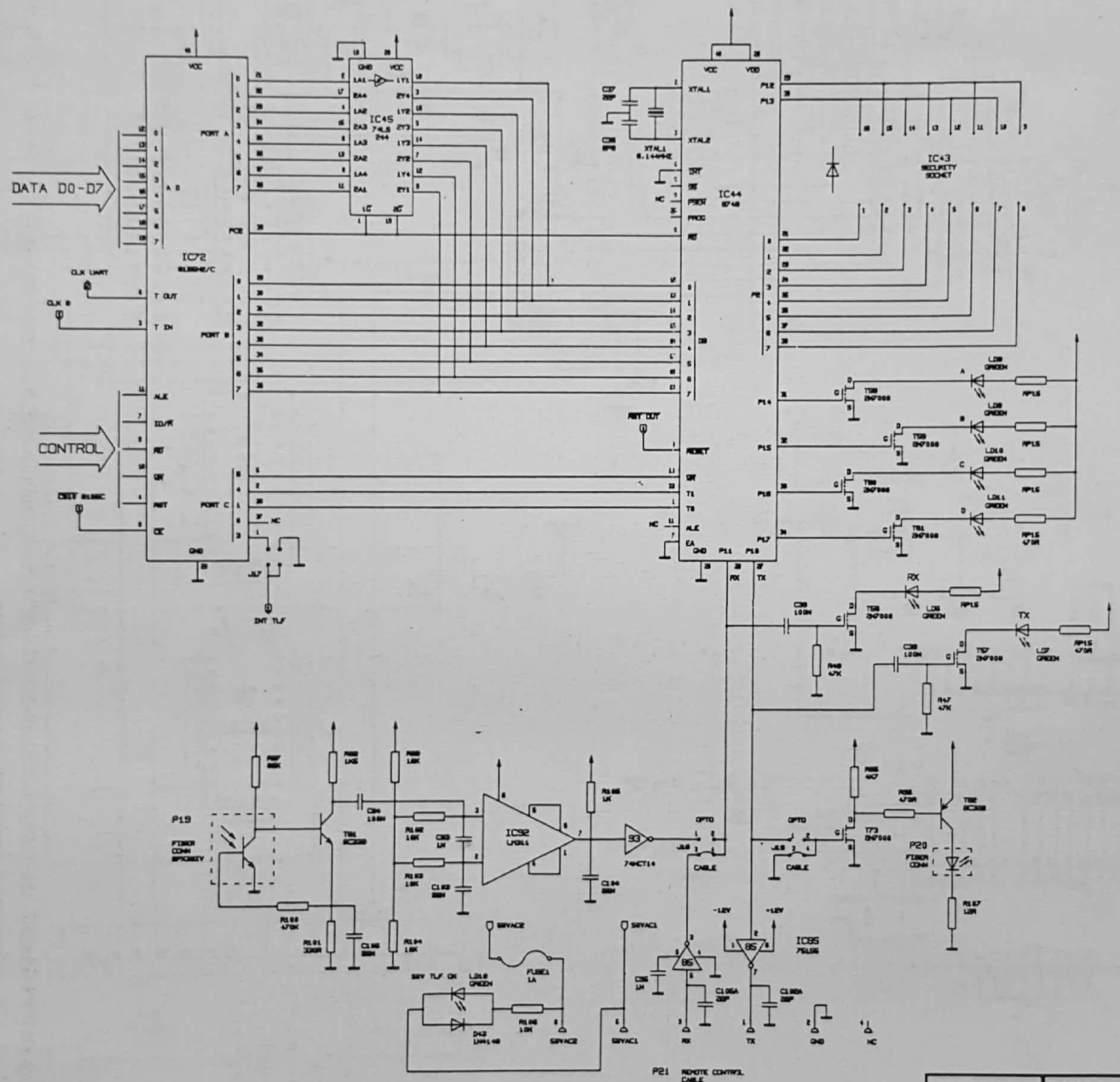

wimi	CHIEF ENG: JC. FRANCK	DATE: 1/06/88	C P U PR328/REV
	CHECK ENG: W. DE BRUECKER	REV: 0	
	DRAW ENG: R. DESMET	SHEET: 4 OF 6	REMOTE CONTROL INTERFACE
	NV W. MICHIELS WIJNGAARDSTRAAT 36 B-9451 KERKSKEN 053/789494		

Scanned by CamScanner

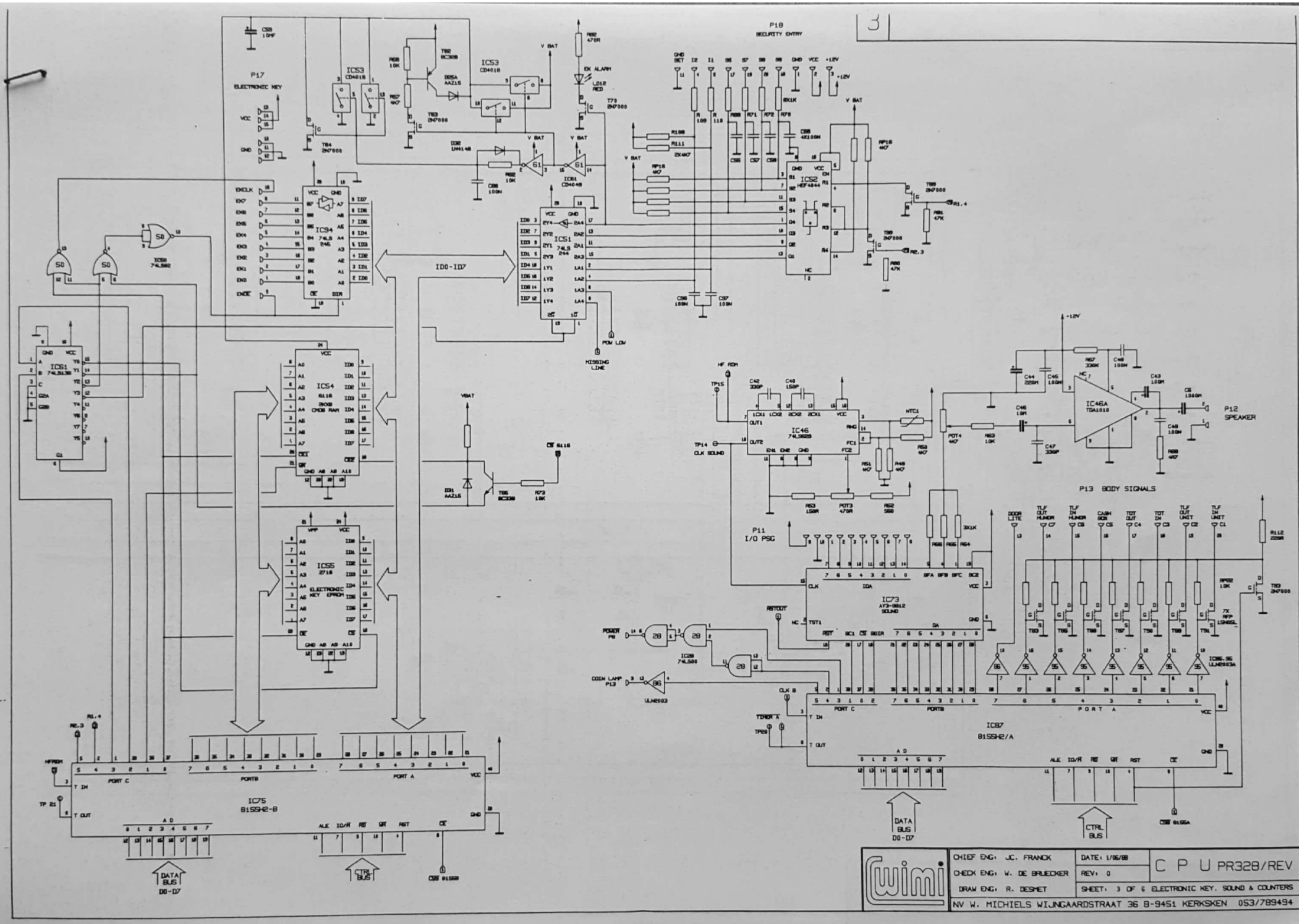

Scanned by CamScanner

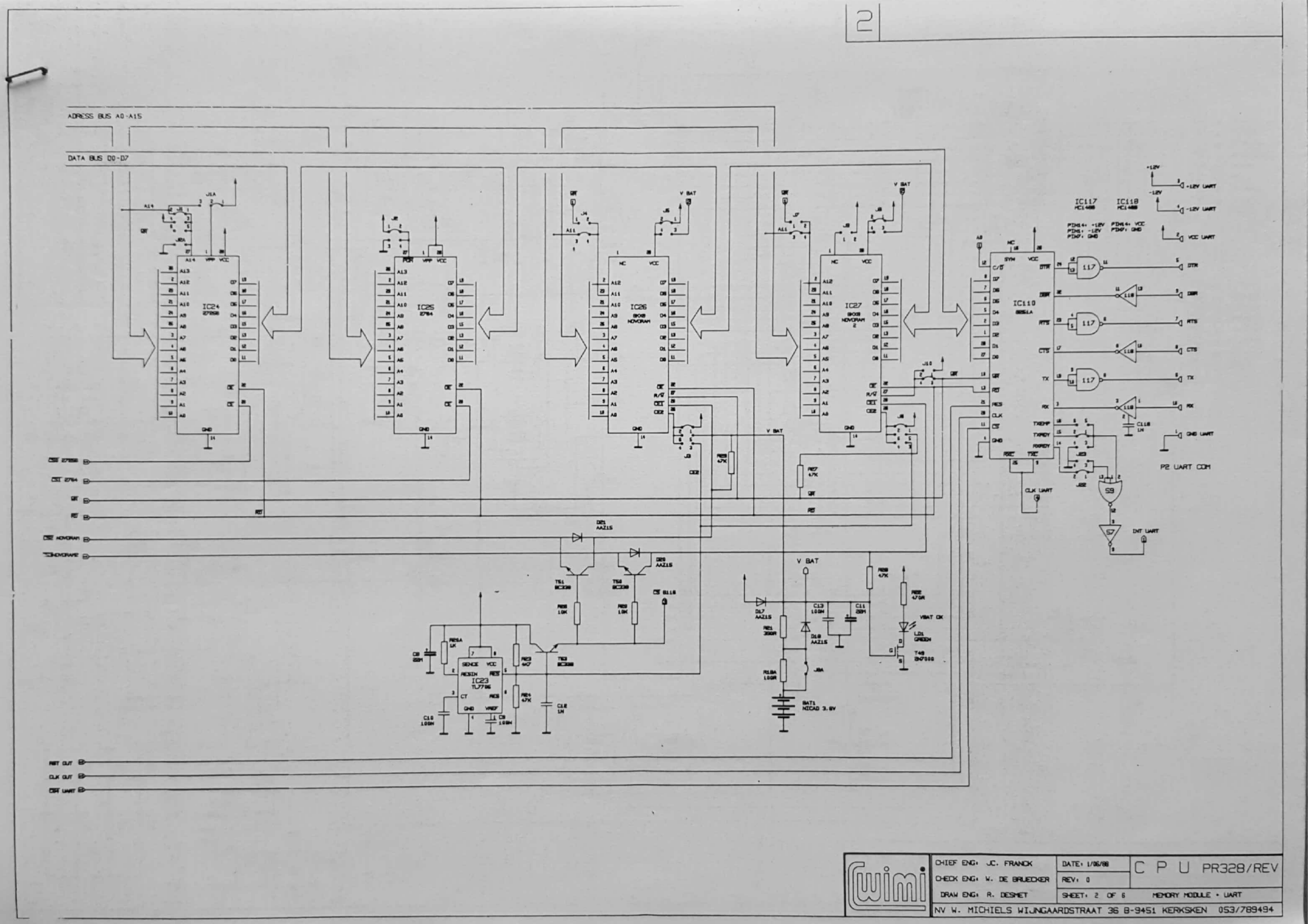

Scanned by CamScanner

Scanned by CamScanner

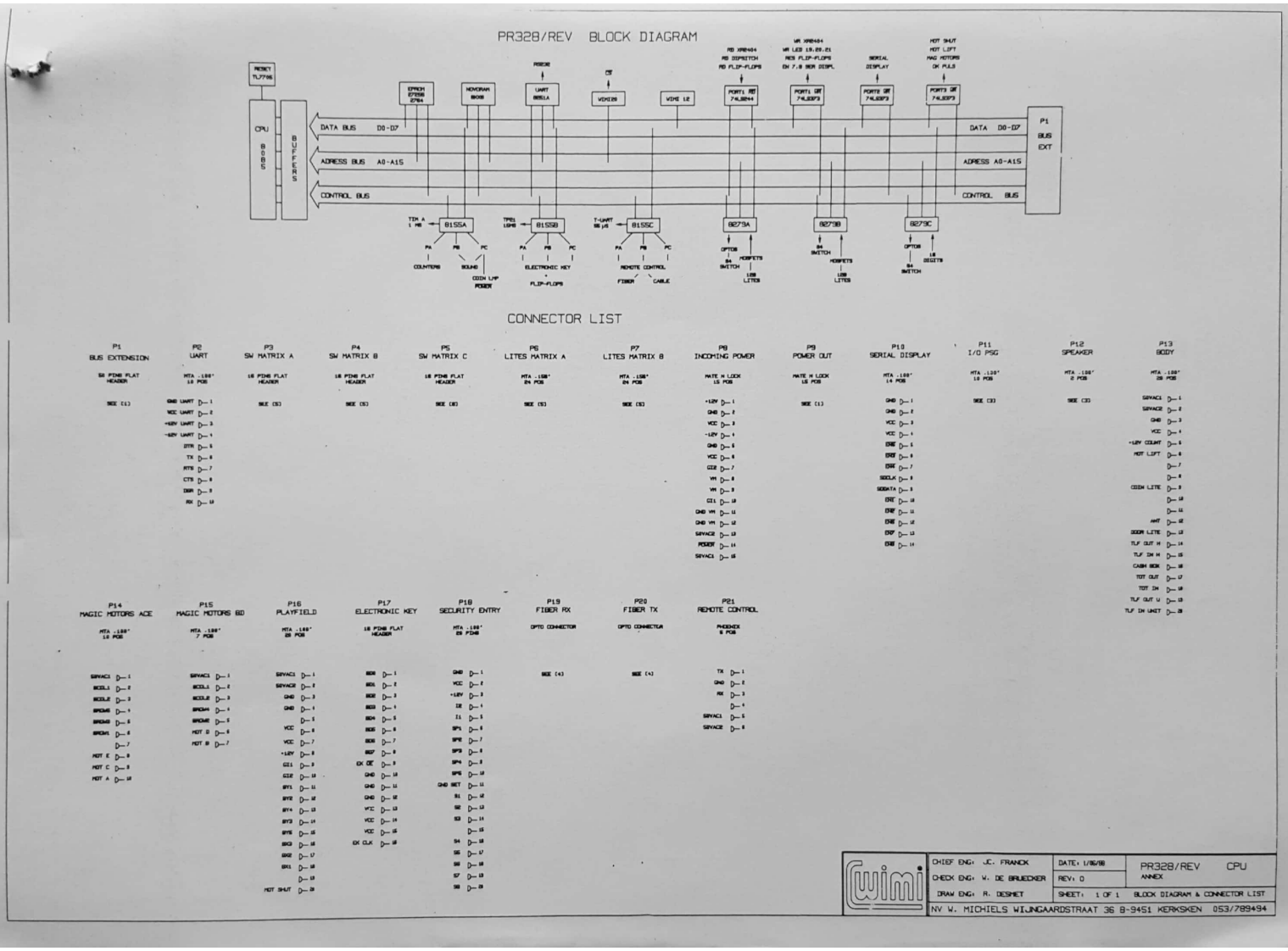

Scanned by CamScanner